Property Location: 40 MERRIAM ST | **MAP ID: 25/ 152/ 18/ /** | **Bldg Name:** | **State Use: 101**

Vision ID: 1541 | **Account #1576** | **Bldg #: 1 of 1** | **Sec #: 1 of 1** | **Card 1 of 1** | **Print Date: 12/26/2014 13:13**

CURRENT OWNER	TOPO.	UTILITIES	STRT./ROAD	LOCATION
WHITEHEAD CHRISTINE S		1 TYPCL		
WHITEHEAD JAMES A				
40 MERRIAM ST				
EAST LONGMEADOW, MA 01028				
Additional Owners:				

SUPPLEMENTAL DATA

Other ID:	Received
SP Permit	Prior ID
Chapter Land	Owner Occ Y
OC Dates	Final Area 1204
In+Ex FY	Current Ac. .22337
Mailed	
GIS ID: F_380838_2852858	ASSOC PID#

CURRENT ASSESSMENT

Description	Code	Appraised Value	Assessed Value
RESIDNTL.	101	89,300	89,300
RES LAND	101	78,000	78,000
RESIDNTL.	101	2,500	2,500
Total		169,800	169,800

1006
EAST LONGMEADOW, M

VISION

RECORD OF OWNERSHIP

	BK-VOL/PAGE	SALE DATE	q/u	v/i	SALE PRICE	V.C.
WHITEHEAD CHRISTINE S	10018/ 0112	10/01/1997	U	I	103,634	
DUPRE ARNOLD J	08620/ 0331	11/03/1993	U	I	1	A
DUPRE ARNOLD J	07774/ 0599	08/08/1991	U	I	1	A
DUPRE ARNOLD J	07766/ 0449	07/30/1991	U	I	94,000	
ROCHE MARK G + LOCHLAN J	05318/ 0193	10/01/1982	U	I	0	

PREVIOUS ASSESSMENTS (HISTORY)

Yr.	Code	Assessed Value	Yr.	Code	Assessed Value	Yr.	Code	Assessed Value
2014	B	83,900	2013	B	89,400	2012	B	93,100
2014	L	80,500	2013	L	80,500	2012	L	84,000
2014	O	3,700	2013	O	3,700	2012	O	3,700
	Total:	168,100		Total:	173,600		Total:	180,800

EXEMPTIONS

Year	Type	Description	Amount
		Total:	

OTHER ASSESSMENTS

Code	Description	Number	Amount	Comm. Int.

This signature acknowledges a visit by a Data Collector or Assessor

ASSESSING NEIGHBORHOOD

NBHD/ SUB	NBHD Name	Street Index Name	Tracing	Batch
0001/A			101	MA

NOTES

SALE LTR SENT 12/12/97

APPRAISED VALUE SUMMARY

Appraised Bldg. Value (Card)	89,300
Appraised XF (B) Value (Bldg)	0
Appraised OB (L) Value (Bldg)	2,500
Appraised Land Value (Bldg)	78,000
Special Land Value	0
Total Appraised Parcel Value	169,800
Valuation Method:	C
Adjustment:	0
Net Total Appraised Parcel Value	**169,800**

BUILDING PERMIT RECORD

Permit ID	Issue Date	Type	Description	Amount	Insp. Date	% Comp.	Date Comp.	Comments
44	03/01/1987	MN	Manual Note	200		0		WD STOVE

VISIT/ CHANGE HISTORY

Date	Type	IS	ID	Cd.	Purpose/Result
10/17/2014			317	2	MEASURED
03/24/2004			250	22	MAILER SENT
10/24/2003			274	2	MEASURED
08/13/1992			131	2	MEASURED
06/17/1992			107	22	MAILER SENT

LAND LINE VALUATION SECTION

B #	Use Code	Use Description	Zone	D	Front	Depth	Units		Unit Price	I. Factor	S.A.	Acre Disc	C. Factor	ST. Idx	Adj.	Notes- Adj	Special Pricing Spec Use	Special Pricing Spec Calc	S Adj Fact	Adj. Unit Price	Land Value
1	101	ONE FAM	RC				9,730	SF	8.02	1.0000	5	1.0000	1.00	MA	1.00				1.00	8.02	78,000

Total Card Land Units: 0.22 AC | Parcel Total Land Area: 0.22 AC | Total Land Value: 78,000

Property Location: 40 MERRIAM ST **MAP ID:** 25/ 152/ 18/ / **Bldg Name:** **State Use:** 101

Vision ID: 1541 **Account #** 1576 **Bldg #:** 1 of 1 **Sec #:** 1 of 1 **Card** 1 of 1 **Print Date:** 12/26/2014 13:13

CONSTRUCTION DETAIL

Element	Cd.	Ch.	Description
Style	15		OLD STYLE
Model	01		RESIDENTIAL
Grade	C		AVERAGE
Stories	1.75		1 3/4 Stories
Foundation	3		
Exterior Wall 1	1		WOOD SHING
Exterior Wall 2	4		VINYL
Roof Structure	1		GABLE
Roof Cover	1		ASPHALT SH
Interior Wall 1	2		PLASTER
Interior Wall 2			
Interior Floor 1	3		HARDWOOD
Interior Floor 2			
Heat Fuel	1		OIL
Heat Type	5		STEAM
AC Type	01		NONE
Bedrooms	2		
Full Baths	1		
Half Baths	1		
Extra Fixtures	0		
Total Rooms	5		
Bath Style	A		AVERAGE
Kitchen Style	A		AVERAGE
Kitchens	1		
Extra Kitchens	0		
Frame	1		WOOD
Basement Floor			
Bsmt Garage			
Units	1		
WS Flues			
FBM Quality	3		
Fireplaces	1		

CONSTRUCTION DETAIL (CONTINUED)

Element	Cd.	Ch.	Description
#Heat Sys	1		
Central Vac	0		NO
FBM Sqft	578		
Int vs Ext	S		

MIXED USE

Code	Description	Percentage
101	ONE FAM	100

COST/MARKET VALUATION

Adj. Base Rate:	84.14
Replace Cost	122,262
AYB	1910
EYB	1987
Dep Code	GD
Remodel Rating	
Year Remodeled	
Dep %	27
Functional Obslnc	
External Obslnc	
Cost Trend Factor	1
Condition	
% Complete	
Overall % Cond	73
Apprais Val	89,300
Dep % Ovr	0
Dep Ovr Comment	
Misc Imp Ovr	0
Misc Imp Ovr Comment	
Cost to Cure Ovr	0
Cost to Cure Ovr Comment	

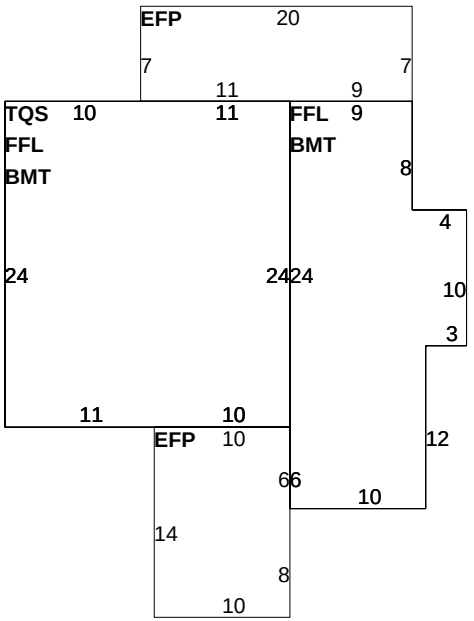

OB-OUTBUILDING & YARD ITEMS(L) / XF-BUILDING EXTRA FEATURES(B)

Code	Description	Sub	Sub Descript	L/B	Units	Unit Price	Yr	Gde	Dp Rt	Cnd	%Cnd	Apr Value
03	GARAGE	OB	Outbuilding	L	200	28.18	1920	F		FR	50	2,500

BUILDING SUB-AREA SUMMARY SECTION

Code	Description	Living Area	Gross Area	Eff. Area	Unit Cost	Undeprec. Value
BMT	BASEMENT	0	826		16.81	13,884
EFP	ENCL PORCH	0	280		25.24	7,068
FFL	1ST FLOOR	826	826		84.14	69,503
TQS	3/4 STORY	378	504		63.11	31,807
	Ttl. Gross Liv/Lease Area:	1,204	2,436	1,453		122,262