Property Location: 291 DWIGHT RD | **MAP ID: 3/ 12/ 2/ /** | **Bldg Name:** | **State Use: 101**

Vision ID: 2557 | **Account #2601** | **Bldg #: 1 of 1** | **Sec #: 1 of 1** | **Card 1 of 1** | **Print Date: 12/27/2014 20:10**

CURRENT OWNER	TOPO.	UTILITIES	STRT./ROAD	LOCATION
GOODCHILD KENT ALAN GOODCHILD KATHLEEN J 291 DWIGHT RD SPRINGFIELD, MA 01108 Additional Owners:		1 TYPCL		

SUPPLEMENTAL DATA

Other ID:	Received
SP Permit	Prior ID
Chapter Land	Owner Occ
OC Dates	Final Area 1848
In+Ex FY	Current Ac. .2663
Mailed	
GIS ID: F_374307_2853543	ASSOC PID#

CURRENT ASSESSMENT

Description	Code	Appraised Value	Assessed Value
RESIDNTL.	101	23,400	23,400
RES LAND	101	58,000	58,000
RESIDNTL.	101	800	800
	Total	82,200	82,200

1006
EAST LONGMEADOW, M

VISION

RECORD OF OWNERSHIP

	BK-VOL/PAGE	SALE DATE	q/u	v/i	SALE PRICE	V.C.
GOODCHILD KENT ALAN	LC002-1666	02/13/1985	U	I	0	F

PREVIOUS ASSESSMENTS (HISTORY)

Yr.	Code	Assessed Value	Yr.	Code	Assessed Value	Yr.	Code	Assessed Value
2014	B	23,700	2013	B	23,700	2012	B	24,300
2014	L	57,300	2013	L	54,700	2012	L	61,100
2014	O	700	2013	O	700	2012	O	700
	Total:	81,700		Total:	79,100		Total:	86,100

EXEMPTIONS

Year	Type	Description	Amount
		Total:	

OTHER ASSESSMENTS

Code	Description	Number	Amount	Comm. Int.

This signature acknowledges a visit by a Data Collector or Assessor

ASSESSING NEIGHBORHOOD

NBHD/ SUB	NBHD Name	Street Index Name	Tracing	Batch
0001/A			101	MF

NOTES

TOWN LINE BISECTS HOUSE. 10% IN EL

ADDITION ADDS 5 MORE %=15% IN EL

APPRAISED VALUE SUMMARY

Appraised Bldg. Value (Card)	23,400
Appraised XF (B) Value (Bldg)	0
Appraised OB (L) Value (Bldg)	800
Appraised Land Value (Bldg)	58,000
Special Land Value	0
Total Appraised Parcel Value	82,200
Valuation Method:	C
Adjustment:	0
Net Total Appraised Parcel Value	**82,200**

BUILDING PERMIT RECORD

Permit ID	Issue Date	Type	Description	Amount	Insp. Date	% Comp.	Date Comp.	Comments
266	10/01/1989	MN	Manual Note	34,000		0		ADDN

VISIT/ CHANGE HISTORY

Date	Type	IS	ID	Cd.	Purpose/Result
04/05/2004			311	3	MEAS+INSPCTD
05/14/1992			131	14	INSPECTED
08/09/1990			131	2	MEASURED
01/19/1990			105	15	PERMIT VISIT
06/04/1980			500	3	MEAS+INSPCTD

LAND LINE VALUATION SECTION

B #	Use Code	Use Description	Zone	D	Front	Depth	Units		Unit Price	I. Factor	S.A.	Acre Disc	C. Factor	ST. Idx	Adj.	Notes- Adj	Special Pricing Spec Use		Spec Calc		S Adj Fact	Adj. Unit Price	Land Value
1	101	ONE FAM	RC				11,600	SF	6.78	0.8200	3	1.0000	1.00	MF	1.00				TRF3	.90	.90	5.00	58,000

Total Card Land Units: 0.27 AC | **Parcel Total Land Area:** 0.27 AC | **Total Land Value:** 58,000

Property Location: 291 DWIGHT RD **MAP ID:** 3/ 12/ 2/ / **Bldg Name:** **State Use:** 101

Vision ID: 2557 **Account #** 2601 **Bldg #:** 1 of 1 **Sec #:** 1 of 1 **Card** 1 of 1 **Print Date:** 12/27/2014 20:10

CONSTRUCTION DETAIL

Element	Cd.	Ch.	Description
Style	06		COLONIAL
Model	01		RESIDENTIAL
Grade	C		AVERAGE
Stories	2.5		
Foundation	3		MASONRY
Exterior Wall 1	4		VINYL
Exterior Wall 2			
Roof Structure	1		GABLE
Roof Cover	1		ASPHALT SH
Interior Wall 1	2		PLASTER
Interior Wall 2			
Interior Floor 1	3		HARDWOOD
Interior Floor 2			
Heat Fuel	2		GAS
Heat Type	5		STEAM
AC Type	01		NONE
Bedrooms	3		
Full Baths	2		
Half Baths	0		
Extra Fixtures	1		
Total Rooms	6		
Bath Style	A		AVERAGE
Kitchen Style	A		AVERAGE
Kitchens	1		
Extra Kitchens	0		
Frame	1		WOOD
Basement Floor	12		
Bsmt Garage			
Units	1		
WS Flues			
FBM Quality	1		
Fireplaces	0		

CONSTRUCTION DETAIL (CONTINUED)

Element	Cd.	Ch.	Description
#Heat Sys	1		
Central Vac	0		NO
FBM Sqft	207		
Int vs Ext	S		

MIXED USE

Code	Description	Percentage
101	ONE FAM	100

COST/MARKET VALUATION

Adj. Base Rate:	82.50
Replace Cost	179,854
AYB	1920
EYB	1987
Dep Code	GD
Remodel Rating	
Year Remodeled	
Dep %	27
Functional Obslnc	
External Obslnc	5
Cost Trend Factor	1
Condition	PT
% Complete	13
Overall % Cond	13
Apprais Val	23,400
Dep % Ovr	0
Dep Ovr Comment	
Misc Imp Ovr	0
Misc Imp Ovr Comment	
Cost to Cure Ovr	0
Cost to Cure Ovr Comment	

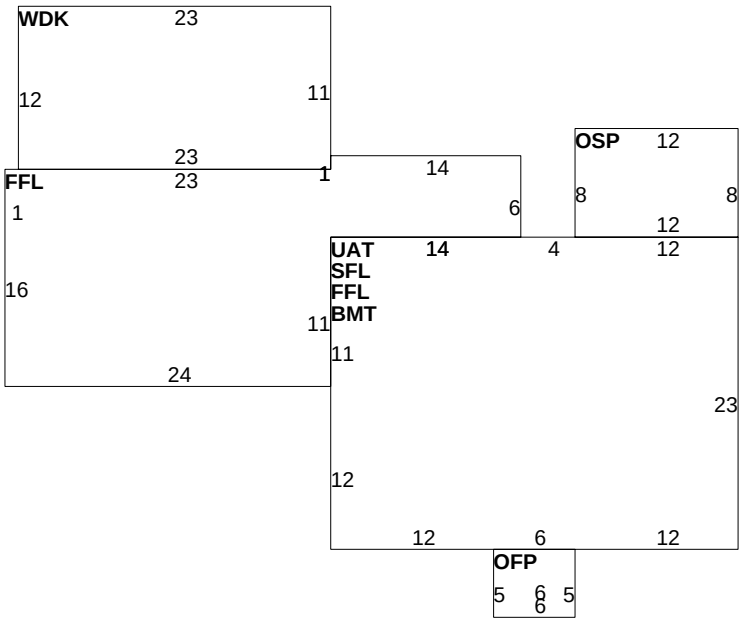

OB-OUTBUILDING & YARD ITEMS(L) / XF-BUILDING EXTRA FEATURES(B)

Code	Description	Sub	Sub Descript	L/B	Units	Unit Price	Yr	Gde	Dp Rt	Cnd	%Cnd	Apr Value
19	PATIO			L	280	5.75	1960	A		FR	50	800
03	GARAGE	EX	Extra Feature	B	400	28.18	1987	A	1	FR	0	0

BUILDING SUB-AREA SUMMARY SECTION

Code	Description	Living Area	Gross Area	Eff. Area	Unit Cost	Undeprec. Value
BMT	BASEMENT	0	690		16.50	11,385
FFL	1ST FLOOR	1,158	1,158		82.50	95,537
OFP	OPEN PORCH	0	30		8.25	248
OSP	SCRN PORCH	0	96		12.03	1,155
SFL	2ND FLOOR	690	690		82.50	56,926
UAT	UNFIN ATTC	0	690		16.50	11,385
WDK	WOOD DECK	0	276		11.66	3,218
	Ttl. Gross Liv/Lease Area:	1,848	3,630	2,180		179,854