Property Location: 162 KIBBE RD | **MAP ID: 51/ 15/ 2/ /** | **Bldg Name:** | **State Use: 101**

Vision ID: 4134 | **Account #4201** | **Bldg #: 1 of 1** | **Sec #: 1 of 1** | **Card 1 of 1** | **Print Date: 12/28/2014 12:29**

CURRENT OWNER

MACFARLANE STEVEN D
MACFARLANE JULIA M
162 KIBBE RD

EAST LONGMEADOW, MA 01028
Additional Owners:

TOPO.	UTILITIES	STRT./ROAD	LOCATION

SUPPLEMENTAL DATA

Other ID:	Received
SP Permit	Prior ID
Chapter Land	Owner Occ Y
OC Dates	Final Area 2062.29999
In+Ex FY	Current Ac. 1.14827
Mailed	
GIS ID: F_385967_2849318	ASSOC PID#

CURRENT ASSESSMENT

Description	Code	Appraised Value	Assessed Value
RESIDNTL.	101	210,200	210,200
RES LAND	101	96,000	96,000
Total		306,200	306,200

1006
AST LONGMEADOW, M

VISION

RECORD OF OWNERSHIP

	BK-VOL/PAGE	SALE DATE	q/u	v/i	SALE PRICE	V.C.
MACFARLANE STEVEN D	16913/ 212	09/07/2007	U	I	348,500	
BROWN,JUDITH O	14687/ 2	12/08/2004	U	I	312,000	
WILLIAMS,MICHAEL P	13854/ 469	12/17/2003	U	I	100	A
PAIGE CATHY-ANN,	08817/ 0450	04/29/1994	U	I	200,000	
NOREEN CLIFFORD M	05804/ 0194	05/01/1985	U	I	27,500	

PREVIOUS ASSESSMENTS (HISTORY)

Yr.	Code	Assessed Value	Yr.	Code	Assessed Value	Yr.	Code	Assessed Value
2014	B	210,500	2013	B	200,100	2012	B	203,800
2014	L	98,800	2013	L	101,700	2012	L	98,300
	Total:	309,300		Total:	301,800		Total:	302,100

EXEMPTIONS

Year	Type	Description	Amount
		Total:	

OTHER ASSESSMENTS

Code	Description	Number	Amount	Comm. Int.

This signature acknowledges a visit by a Data Collector or Assessor

APPRAISED VALUE SUMMARY

Appraised Bldg. Value (Card)	210,200
Appraised XF (B) Value (Bldg)	0
Appraised OB (L) Value (Bldg)	0
Appraised Land Value (Bldg)	96,000
Special Land Value	0
Total Appraised Parcel Value	306,200
Valuation Method:	C
Adjustment:	0
Net Total Appraised Parcel Value	**306,200**

ASSESSING NEIGHBORHOOD

NBHD/ SUB	NBHD Name	Street Index Name	Tracing	Batch
0001/A			101	MG

NOTES

BUILDING PERMIT RECORD

Permit ID	Issue Date	Type	Description	Amount	Insp. Date	% Comp.	Date Comp.	Comments
16	02/18/1998	7	REMODEL	7,250		0		
142	01/01/1986	MN	Manual Note	0		0		SFR

VISIT/ CHANGE HISTORY

Date	Type	IS	ID	Cd.	Purpose/Result
08/21/2009			375	3	MEAS+INSPCTD
05/09/2002			274	2	MEASURED
03/18/1999			200	15	PERMIT VISIT
03/02/1992			170	3	MEAS+INSPCTD

LAND LINE VALUATION SECTION

B #	Use Code	Use Description	Zone	D	Front	Depth	Units		Unit Price	I. Factor	S.A.	Acre Disc	C. Factor	ST. Idx	Adj.	Notes- Adj	Special Pricing Spec Use		Spec Calc		S Adj Fact	Adj. Unit Price	Land Value
1	101	ONE FAM	RAA				40,000	SF	2.20	1.1900	7	1.0000	1.00	MG	1.00				TRF1	.90	.90	2.36	94,400
1	101	ONE FAM	RAA				0.23	AC	7,000.00	1.0000	0	1.0000	1.00	MG	1.00						1.00	7,000.00	1,600

Total Card Land Units: 1.15 AC | **Parcel Total Land Area:** 1.15 AC | **Total Land Value:** 96,000

Property Location: 162 KIBBE RD **MAP ID:** 51/ 15/ 2/ / **Bldg Name:** **State Use:** 101

Vision ID: 4134 **Account #**4201 **Bldg #:** 1 of 1 **Sec #:** 1 of 1 **Card** 1 of 1 **Print Date:** 12/28/2014 12:29

CONSTRUCTION DETAIL

Element	Cd.	Ch.	Description
Style	05		CAPE
Model	01		RESIDENTIAL
Grade	C+		AVG. (+)
Stories	1.75		1 3/4 Stories
Foundation	1		
Exterior Wall 1	2		CLAPBOARD
Exterior Wall 2	1		WOOD SHING
Roof Structure	1		GABLE
Roof Cover	1		ASPHALT SH
Interior Wall 1	1		DRYWALL
Interior Wall 2			
Interior Floor 1	3		HARDWOOD
Interior Floor 2	4		CARPET
Heat Fuel	2		GAS
Heat Type	1		FORCED H/A
AC Type	03		Full
Bedrooms	3		
Full Baths	1		
Half Baths	1		
Extra Fixtures	2		
Total Rooms	7		
Bath Style	A		AVERAGE
Kitchen Style	G		GOOD
Kitchens	1		
Extra Kitchens	0		
Frame	1		WOOD
Basement Floor			
Bsmt Garage			
Units	1		
WS Flues			
FBM Quality			
Fireplaces	1		

CONSTRUCTION DETAIL (CONTINUED)

Element	Cd.	Ch.	Description
#Heat Sys	1		
Central Vac	0		
FBM Sqft			
Int vs Ext	S		

MIXED USE

Code	Description	Percentage
101	ONE FAM	100

COST/MARKET VALUATION

Adj. Base Rate:	82.70
Replace Cost	247,348
AYB	1986
EYB	1999
Dep Code	GD
Remodel Rating	
Year Remodeled	
Dep %	15
Functional Obslnc	
External Obslnc	
Cost Trend Factor	1
Condition	
% Complete	
Overall % Cond	85
Apprais Val	210,200
Dep % Ovr	0
Dep Ovr Comment	
Misc Imp Ovr	0
Misc Imp Ovr Comment	
Cost to Cure Ovr	0
Cost to Cure Ovr Comment	

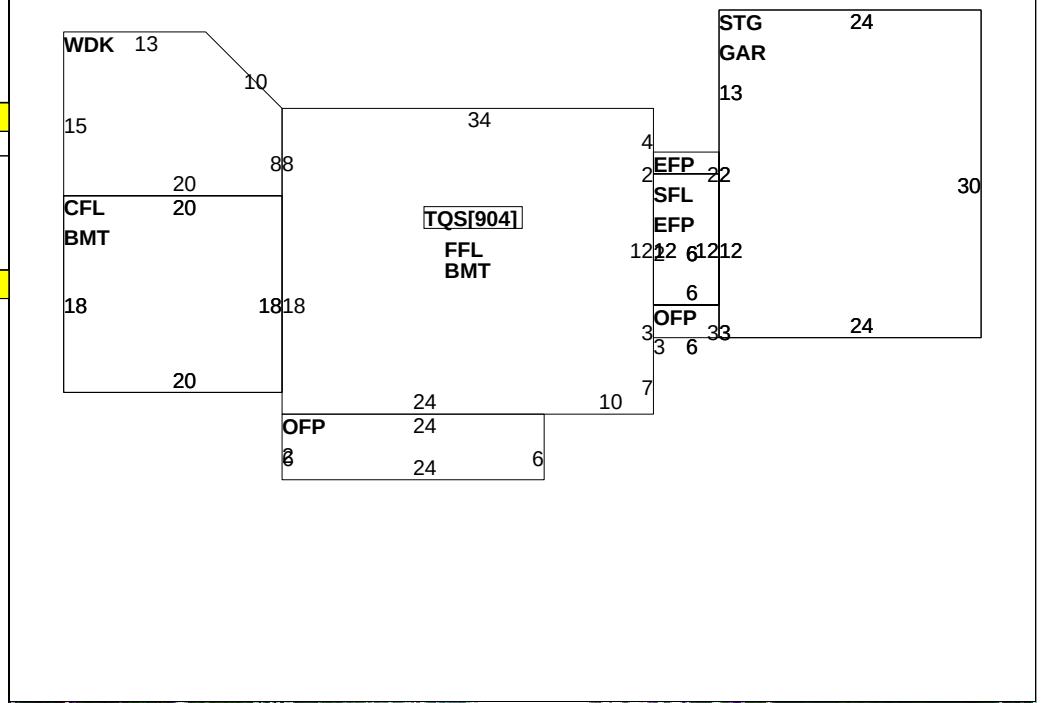

OB-OUTBUILDING & YARD ITEMS(L) / XF-BUILDING EXTRA FEATURES(B)

Code	Description	Sub	Sub Descript	L/B	Units	Unit Price	Yr	Gde	Dp Rt	Cnd	%Cnd	Apr Value

BUILDING SUB-AREA SUMMARY SECTION

Code	Description	Living Area	Gross Area	Eff. Area	Unit Cost	Undeprec. Value
BMT	BASEMENT	0	1,312		16.51	21,667
CFL	CATHEDRAL CE	360	360		85.22	30,681
EFP	ENCL PORCH	0	84		24.61	2,067
FFL	1ST FLOOR	952	952		82.70	78,728
GAR	GARAGE	0	720		33.08	23,817
OFP	OPEN PORCH	0	162		8.17	1,323
SFL	2ND FLOOR	72	72		82.70	5,954
STG	STORAGE	0	720		33.08	23,817
TQS	3/4 STORY	678	904		62.02	56,069
WDK	WOOD DECK	0	276		11.69	3,225
	Ttl. Gross Liv/Lease Area:	2,062	5,562	2,991		247,348