Property Location: 55 ALLEN ST | **MAP ID: 58/ 47/ 0/ /** | **Bldg Name:** | **State Use: 101**

Vision ID: 4414 | **Account #4483** | **Bldg #: 1 of 1** | **Sec #: 1 of 1** | **Card 1 of 1** | **Print Date: 12/28/2014 13:39**

CURRENT OWNER	TOPO.	UTILITIES	STRT./ROAD	LOCATION
STONE JONATHAN D		1 TYPCL		
55 ALLEN ST				
EAST LONGMEADOW, MA 01028				
Additional Owners:				

SUPPLEMENTAL DATA

Other ID:	Received
SP Permit	Prior ID
Chapter Land	Owner Occ
OC Dates	Final Area 2837.84998
In+Ex FY	Current Ac. 1.29827
Mailed	
GIS ID: F_388489_2857265	ASSOC PID#

CURRENT ASSESSMENT

Description	Code	Appraised Value	Assessed Value
RESIDNTL.	101	170,200	170,200
RES LAND	101	97,100	97,100
RESIDNTL.	101	35,500	35,500
	Total	302,800	302,800

1006
EAST LONGMEADOW, M

VISION

RECORD OF OWNERSHIP

	BK-VOL/PAGE	SALE DATE	q/u	v/i	SALE PRICE	V.C.
STONE JONATHAN D	17321/ 449	05/27/2008	U	I	310,000	
COGHLAN W PATRICK +,	04604/ 0358	06/12/1978	U	I	0	

PREVIOUS ASSESSMENTS (HISTORY)

Yr.	Code	Assessed Value	Yr.	Code	Assessed Value	Yr.	Code	Assessed Value
2014	B	164,700	2013	B	165,600	2012	B	173,300
2014	L	99,900	2013	L	101,700	2012	L	98,400
2014	O	40,700	2013	O	40,800	2012	O	36,700
	Total:	305,300		Total:	308,100		Total:	308,400

EXEMPTIONS

Year	Type	Description	Amount
		Total:	

OTHER ASSESSMENTS

Code	Description	Number	Amount	Comm. Int.

This signature acknowledges a visit by a Data Collector or Assessor

ASSESSING NEIGHBORHOOD

NBHD/ SUB	NBHD Name	Street Index Name	Tracing	Batch
0001/A			101	MG

NOTES

NO FLOOR COVER IN BMT

APPRAISED VALUE SUMMARY

Appraised Bldg. Value (Card)	170,200
Appraised XF (B) Value (Bldg)	0
Appraised OB (L) Value (Bldg)	35,500
Appraised Land Value (Bldg)	97,100
Special Land Value	0
Total Appraised Parcel Value	302,800
Valuation Method:	C
Adjustment:	0
Net Total Appraised Parcel Value	**302,800**

BUILDING PERMIT RECORD

Permit ID	Issue Date	Type	Description	Amount	Insp. Date	% Comp.	Date Comp.	Comments
334	01/01/1986	MN	Manual Note	0		0		ADDITION

VISIT/ CHANGE HISTORY

Date	Type	IS	ID	Cd.	Purpose/Result
03/09/2012			317	16	FIELDREV CHG
10/09/2008			317	14	INSPECTED
10/03/2008			317	2	MEASURED
02/05/2004			311	15	PERMIT VISIT
02/11/2003			274	15	PERMIT VISIT

LAND LINE VALUATION SECTION

B #	Use Code	Use Description	Zone	D	Front	Depth	Units		Unit Price	I. Factor	S.A.	Acre Disc	C. Factor	ST. Idx	Adj.	Notes- Adj	Special Pricing Spec Use		Spec Calc		S Adj Fact	Adj. Unit Price	Land Value
1	101	ONE FAM	RA				40,000	SF	2.20	1.1900	7	1.0000	1.00	MG	1.00				TRF2	.90	.90	2.36	94,400
1	101	ONE FAM	RA				0.38	AC	7,000.00	1.0000	0	1.0000	1.00	MG	1.00						1.00	7,000.00	2,700

Total Card Land Units: 1.30 AC | **Parcel Total Land Area:** 1.3 AC | **Total Land Value:** 97,100

Property Location: 55 ALLEN ST **MAP ID:** 58/ 47/ 0/ / **Bldg Name:** **State Use:** 101

Vision ID: 4414 **Account #** 4483 **Bldg #:** 1 of 1 **Sec #:** 1 of 1 **Card** 1 of 1 **Print Date:** 12/28/2014 13:39

CONSTRUCTION DETAIL

Element	Cd.	Ch.	Description
Style	05		CAPE
Model	01		RESIDENTIAL
Grade	C		AVERAGE
Stories	1.75		1 3/4 Stories
Foundation	3		MASONRY
Exterior Wall 1	3		ALUMINUM
Exterior Wall 2			
Roof Structure	1		GABLE
Roof Cover	1		ASPHALT SH
Interior Wall 1	2		PLASTER
Interior Wall 2			
Interior Floor 1	3		HARDWOOD
Interior Floor 2			
Heat Fuel	1		OIL
Heat Type	3		FORCED H/W
AC Type	01		NONE
Bedrooms	5		
Full Baths	2		
Half Baths	1		
Extra Fixtures	0		
Total Rooms	10		
Bath Style	G		GOOD
Kitchen Style	G		GOOD
Kitchens	1		
Extra Kitchens	0		
Frame	1		WOOD
Basement Floor	12		
Bsmt Garage			
Units	1		
WS Flues	1		
FBM Quality			
Fireplaces	1		

CONSTRUCTION DETAIL (CONTINUED)

Element	Cd.	Ch.	Description
#Heat Sys	1		
Central Vac	0		NO
FBM Sqft			
Int vs Ext	S		

MIXED USE

Code	Description	Percentage
101	ONE FAM	100

COST/MARKET VALUATION

Adj. Base Rate:	76.33
Replace Cost	233,124
AYB	1930
EYB	1987
Dep Code	GD
Remodel Rating	
Year Remodeled	
Dep %	27
Functional Obslnc	
External Obslnc	
Cost Trend Factor	1
Condition	
% Complete	
Overall % Cond	73
Apprais Val	170,200
Dep % Ovr	0
Dep Ovr Comment	
Misc Imp Ovr	0
Misc Imp Ovr Comment	
Cost to Cure Ovr	0
Cost to Cure Ovr Comment	

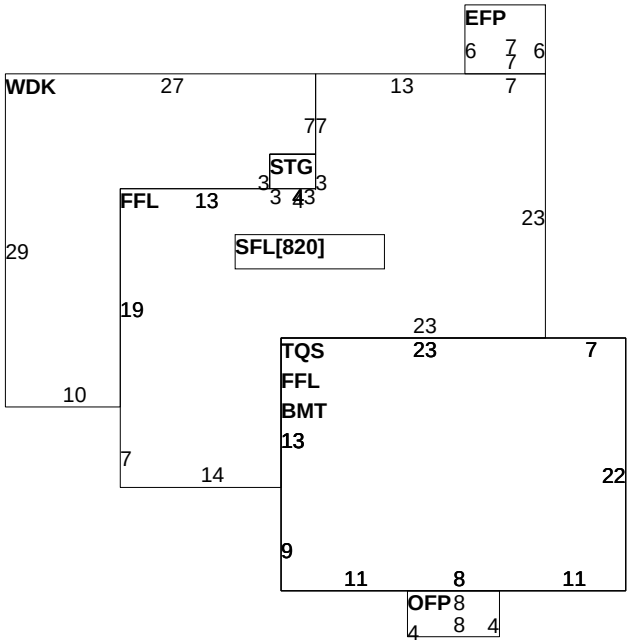

OB-OUTBUILDING & YARD ITEMS(L) / XF-BUILDING EXTRA FEATURES(B)

Code	Description	Sub	Sub Descript	L/B	Units	Unit Price	Yr	Gde	Dp Rt	Cnd	%Cnd	Apr Value
11	POOL I-V	OB	Outbuilding	L	512	29.00	1970	A		AV	60	8,900
03	GARAGE	OB	Outbuilding	L	768	28.18	1965	A		AV	60	13,000
32	BARN/LFT			L	560	19.55	2002	A		GD	70	7,700
22	WOOD DK			L	280	9.20	2002	A		GD	70	1,800
14	SCRN HSE			L	280	14.95	2002	A		GD	70	2,900
02	SHED/FR			L	224	7.48	2002	A		GD	70	1,200

BUILDING SUB-AREA SUMMARY SECTION

Code	Description	Living Area	Gross Area	Eff. Area	Unit Cost	Undeprec. Value
BMT	BASEMENT	0	660		15.27	10,076
EFP	ENCL PORCH	0	42		23.63	992
FFL	1ST FLOOR	1,523	1,523		76.33	116,257
OFP	OPEN PORCH	0	32		7.16	229
SFL	2ND FLOOR	820	820		76.33	62,594
STG	STORAGE	0	12		31.81	382
TQS	3/4 STORY	495	660		57.25	37,785
WDK	WOOD DECK	0	448		10.73	4,809
	Ttl. Gross Liv/Lease Area:	2,838	4,197	3,054		233,124