Property Location: 315 MILLBROOK DR | **MAP ID: 87/ 43/ 7/ /** | **Bldg Name:** | **State Use: 101**

Vision ID: 5863 | **Account #5945** | **Bldg #: 1 of 1** | **Sec #: 1 of 1** | **Card 1 of 1** | **Print Date: 12/29/2014 01:12**

CURRENT OWNER	TOPO.	UTILITIES	STRT./ROAD	LOCATION
SWIDERSKI PETER A SWIDERSKI DEBRA M 315 MILLBROOK DR EAST LONGMEADOW, MA 01028 Additional Owners:				

SUPPLEMENTAL DATA

Other ID:		Received	
SP Permit	HO	Prior ID	
Chapter Land		Owner Occ	Y
OC Dates		Final Area	2024
In+Ex FY		Current Ac.	.98127
Mailed			
GIS ID:	F_393643_2851517	ASSOC PID#	

CURRENT ASSESSMENT

Description	Code	Appraised Value	Assessed Value
RESIDNTL.	101	203,500	203,500
RES LAND	101	136,000	136,000
RESIDNTL.	101	14,600	14,600
	Total	354,100	354,100

1006
AST LONGMEADOW, M

VISION

RECORD OF OWNERSHIP

	BK-VOL/PAGE	SALE DATE	q/u	v/i	SALE PRICE	V.C.
SWIDERSKI PETER A	LC-33849	10/27/2008	U	I	357,000	
AVEZZIE RICHARD P +,	LC002-7138	10/27/1995	U	I	230,500	
LANGONE RICHARD A +	LC002-3277	08/24/1987	U	I	195,500	G
DUTIL	0/ 0		U		0	

PREVIOUS ASSESSMENTS (HISTORY)

Yr.	Code	Assessed Value	Yr.	Code	Assessed Value	Yr.	Code	Assessed Value
2014	B	203,600	2013	B	198,400	2012	B	199,700
2014	L	142,800	2013	L	138,800	2012	L	138,800
2014	O	17,700	2013	O	17,900	2012	O	18,100
	Total:	364,100		Total:	355,100		Total:	356,600

EXEMPTIONS

Year	Type	Description	Amount
		Total:	

OTHER ASSESSMENTS

Code	Description	Number	Amount	Comm. Int.

This signature acknowledges a visit by a Data Collector or Assessor

APPRAISED VALUE SUMMARY

Appraised Bldg. Value (Card)	203,500
Appraised XF (B) Value (Bldg)	0
Appraised OB (L) Value (Bldg)	14,600
Appraised Land Value (Bldg)	136,000
Special Land Value	0
Total Appraised Parcel Value	354,100
Valuation Method:	C
Adjustment:	0
Net Total Appraised Parcel Value	**354,100**

ASSESSING NEIGHBORHOOD

NBHD/ SUB	NBHD Name	Street Index Name	Tracing	Batch
0001/A			101	NV

NOTES

SUB DIV #545 2 GAS FHA FURNACES

BUILDING PERMIT RECORD

Permit ID	Issue Date	Type	Description	Amount	Insp. Date	% Comp.	Date Comp.	Comments
82	05/12/1997	MN	Manual Note	18,000		0		POOL I
88	04/01/1987	MN	Manual Note	115,000		0		SFR

VISIT/ CHANGE HISTORY

Date	Type	IS	ID	Cd.	Purpose/Result
06/24/2005			274	2	MEASURED
04/20/2000			247	14	INSPECTED
12/02/1999			247	2	MEASURED
01/14/1998			200	15	PERMIT VISIT
03/25/1992			131	3	MEAS+INSPCTD

LAND LINE VALUATION SECTION

B #	Use Code	Use Description	Zone	D	Front	Depth	Units		Unit Price	I. Factor	S.A.	Acre Disc	C. Factor	ST. Idx	Adj.	Notes- Adj	Special Pricing Spec Use	Special Pricing Spec Calc	S Adj Fact	Adj. Unit Price	Land Value
1	101	ONE FAM	RA				40,000	SF	2.20	1.5400	9	1.0000	1.00	NV	1.00				1.00	3.39	135,600
1	101	ONE FAM	RA				0.06	AC	7,000.00	1.0000	0	1.0000	1.00	NV	1.00				1.00	7,000.00	400

Total Card Land Units: 0.98 AC | **Parcel Total Land Area:** 0.98 AC | **Total Land Value:** 136,000

Property Location: 315 MILLBROOK DR **MAP ID:** 87/ 43/ 7/ / **Bldg Name:** **State Use:** 101

Vision ID: 5863 **Account #**5945 **Bldg #:** 1 of 1 **Sec #:** 1 of 1 **Card** 1 of 1 **Print Date:** 12/29/2014 01:12

CONSTRUCTION DETAIL

Element	Cd.	Ch.	Description
Style	06		COLONIAL
Model	01		RESIDENTIAL
Grade	B-		GOOD (-)
Stories	2.00		2 Story
Foundation	1		CONCRETE
Exterior Wall 1	4		VINYL
Exterior Wall 2	8		BRICK VENR
Roof Structure	1		GABLE
Roof Cover	1		ASPHALT SH
Interior Wall 1	1		DRYWALL
Interior Wall 2			
Interior Floor 1	4		CARPET
Interior Floor 2			
Heat Fuel	2		GAS
Heat Type	1		FORCED H/A
AC Type	03		Full
Bedrooms	4		
Full Baths	2		
Half Baths	1		
Extra Fixtures	1		
Total Rooms	8		
Bath Style	A		AVERAGE
Kitchen Style	A		AVERAGE
Kitchens	1		
Extra Kitchens	0		
Frame	1		WOOD
Basement Floor	12		
Bsmt Garage			
Units	1		
WS Flues			
FBM Quality	1		
Fireplaces	1		

CONSTRUCTION DETAIL (CONTINUED)

Element	Cd.	Ch.	Description
#Heat Sys	2		
Central Vac	0		NONE
FBM Sqft	524		
Int vs Ext	S		

MIXED USE

Code	Description	Percentage
101	ONE FAM	100

COST/MARKET VALUATION

Adj. Base Rate:	95.90
Replace Cost	239,460
AYB	1987
EYB	1999
Dep Code	GD
Remodel Rating	
Year Remodeled	
Dep %	15
Functional Obslnc	
External Obslnc	
Cost Trend Factor	1
Condition	
% Complete	
Overall % Cond	85
Apprais Val	203,500
Dep % Ovr	0
Dep Ovr Comment	
Misc Imp Ovr	0
Misc Imp Ovr Comment	
Cost to Cure Ovr	0
Cost to Cure Ovr Comment	

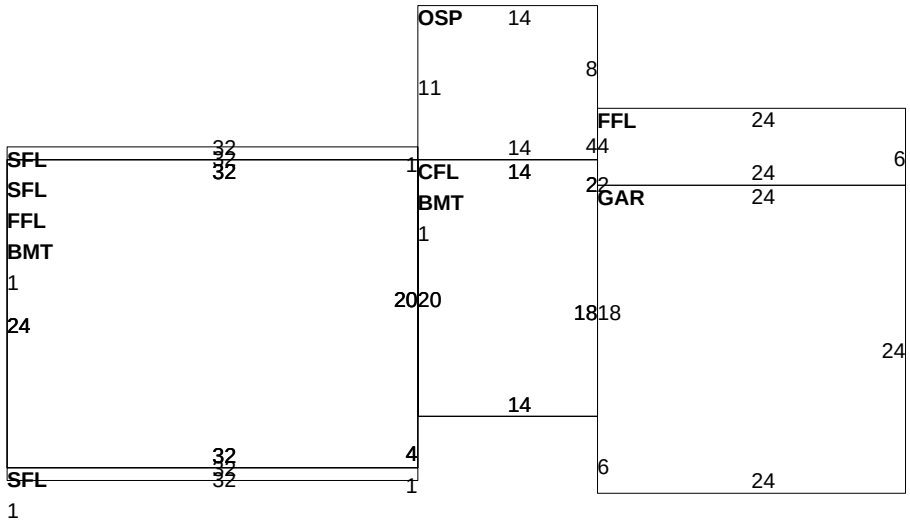

OB-OUTBUILDING & YARD ITEMS(L) / XF-BUILDING EXTRA FEATURES(B)

Code	Description	Sub	Sub Descript	L/B	Units	Unit Price	Yr	Gde	Dp Rt	Cnd	%Cnd	Apr Value
11	POOL I-V	OB	Outbuilding	L	576	29.00	1997	G		GD	70	14,600

BUILDING SUB-AREA SUMMARY SECTION

Code	Description	Living Area	Gross Area	Eff. Area	Unit Cost	Undeprec. Value
BMT	BASEMENT	0	1,048		19.22	20,139
CFL	CATHEDRAL CE	280	280		98.64	27,619
FFL	1ST FLOOR	912	912		95.90	87,460
GAR	GARAGE	0	576		38.29	22,057
OSP	SCRN PORCH	0	168		14.27	2,397
SFL	2ND FLOOR	832	832		95.90	79,788
	Ttl. Gross Liv/Lease Area:	2,024	3,816	2,497		239,460