Property Location: 148 MAPLE ST | **MAP ID: 17/ 26/ 3/ /** | **Bldg Name:** | **State Use: 101**

Vision ID: 850 | **Account #873** | **Bldg #: 1 of 1** | **Sec #: 1 of 1** | **Card 1 of 1** | **Print Date: 12/26/2014 10:15**

CURRENT OWNER	TOPO.	UTILITIES	STRT./ROAD	LOCATION
GAINES DANIEL L GAINES LORI ANN 148 MAPLE ST EAST LONGMEADOW, MA 01028 Additional Owners:		1 TYPCL		

SUPPLEMENTAL DATA

Other ID:	Received
SP Permit	Prior ID
Chapter Land	Owner Occ Y
OC Dates	Final Area 1110
In+Ex FY	Current Ac. .36625
Mailed	
GIS ID: F_378520_2848850	ASSOC PID#

CURRENT ASSESSMENT

Description	Code	Appraised Value	Assessed Value
RESIDNTL.	101	102,900	102,900
RES LAND	101	72,100	72,100
RESIDNTL.	101	20,600	20,600
Total		195,600	195,600

1006
AST LONGMEADOW, M

VISION

RECORD OF OWNERSHIP

	BK-VOL/PAGE	SALE DATE	q/u	v/i	SALE PRICE	V.C.
GAINES DANIEL L	08941/ 0371	09/15/1994	U	I	125,000	
SANTANIELLO JOHN E +	08021/ 0143	04/22/1992	U	I	1	A
SANTANIELLO JOHN E	06787/ 0541	03/25/1988	U	I	113,500	
ALIKHANI	6261/ 135	10/17/1986	U	I	82,500	
BROWNING EL	02709/ 0562	10/26/1959	U	I	0	

PREVIOUS ASSESSMENTS (HISTORY)

Yr.	Code	Assessed Value	Yr.	Code	Assessed Value	Yr.	Code	Assessed Value
2014	B	101,800	2013	B	101,100	2012	B	104,900
2014	L	74,400	2013	L	74,400	2012	L	79,400
2014	O	25,900	2013	O	26,200	2012	O	26,500
	Total:	202,100		Total:	201,700		Total:	210,800

EXEMPTIONS

Year	Type	Description	Amount
		Total:	

OTHER ASSESSMENTS

Code	Description	Number	Amount	Comm. Int.

This signature acknowledges a visit by a Data Collector or Assessor

ASSESSING NEIGHBORHOOD

NBHD/ SUB	NBHD Name	Street Index Name	Tracing	Batch
0001/A			101	MA

NOTES

APPRAISED VALUE SUMMARY

Appraised Bldg. Value (Card)	102,900
Appraised XF (B) Value (Bldg)	0
Appraised OB (L) Value (Bldg)	20,600
Appraised Land Value (Bldg)	72,100
Special Land Value	0
Total Appraised Parcel Value	195,600
Valuation Method:	C
Adjustment:	0
Net Total Appraised Parcel Value	**195,600**

BUILDING PERMIT RECORD

Permit ID	Issue Date	Type	Description	Amount	Insp. Date	% Comp.	Date Comp.	Comments

VISIT/ CHANGE HISTORY

Date	Type	IS	ID	Cd.	Purpose/Result
04/01/2004			250	22	MAILER SENT
03/01/2004			311	2	MEASURED
04/27/1992			107	22	MAILER SENT
06/17/1991			131	2	MEASURED
06/03/1980			500	3	MEAS+INSPCTD

LAND LINE VALUATION SECTION

B #	Use Code	Use Description	Zone	D	Front	Depth	Units		Unit Price	I. Factor	S.A.	Acre Disc	C. Factor	ST. Idx	Adj.	Notes- Adj	Special Pricing Spec Use		Spec Calc		S Adj Fact	Adj. Unit Price	Land Value
1	101	ONE FAM	RB				15,954	SF	5.02	1.0000	5	1.0000	1.00	MA	1.00				TRF2	.90	.90	4.52	72,100

Total Card Land Units: 0.37 AC | **Parcel Total Land Area:** 0.37 AC | **Total Land Value:** 72,100

Property Location: 148 MAPLE ST **MAP ID:** 17/ 26/ 3/ / **Bldg Name:** **State Use:** 101

Vision ID: 850 **Account #**873 **Bldg #:** 1 of 1 **Sec #:** 1 of 1 **Card** 1 of 1 **Print Date:** 12/26/2014 10:15

CONSTRUCTION DETAIL

Element	Cd.	Ch.	Description
Style	19		RANCH
Model	01		RESIDENTIAL
Grade	C		AVERAGE
Stories	1.00		1 Story
Foundation	1		
Exterior Wall 1	4		VINYL
Exterior Wall 2	8		BRICK VENR
Roof Structure	1		GABLE
Roof Cover	1		ASPHALT SH
Interior Wall 1	1		DRYWALL
Interior Wall 2			
Interior Floor 1	4		CARPET
Interior Floor 2	3		HARDWOOD
Heat Fuel	1		OIL
Heat Type	3		FORCED H/W
AC Type	03		Full
Bedrooms	3		
Full Baths	1		
Half Baths	1		
Extra Fixtures	0		
Total Rooms	6		
Bath Style	A		AVERAGE
Kitchen Style	A		AVERAGE
Kitchens	1		
Extra Kitchens	0		
Frame	1		WOOD
Basement Floor			
Bsmt Garage			
Units	1		
WS Flues			
FBM Quality	3		
Fireplaces	0		

CONSTRUCTION DETAIL (CONTINUED)

Element	Cd.	Ch.	Description
#Heat Sys	1		
Central Vac	0		
FBM Sqft	676		
Int vs Ext	S		

MIXED USE

Code	Description	Percentage
101	ONE FAM	100

COST/MARKET VALUATION

Adj. Base Rate:	102.84
Replace Cost	151,277
AYB	1958
EYB	1987
Dep Code	GD
Remodel Rating	
Year Remodeled	
Dep %	27
Functional Obslnc	
External Obslnc	5
Cost Trend Factor	1
Condition	
% Complete	
Overall % Cond	68
Apprais Val	102,900
Dep % Ovr	0
Dep Ovr Comment	
Misc Imp Ovr	0
Misc Imp Ovr Comment	
Cost to Cure Ovr	0
Cost to Cure Ovr Comment	

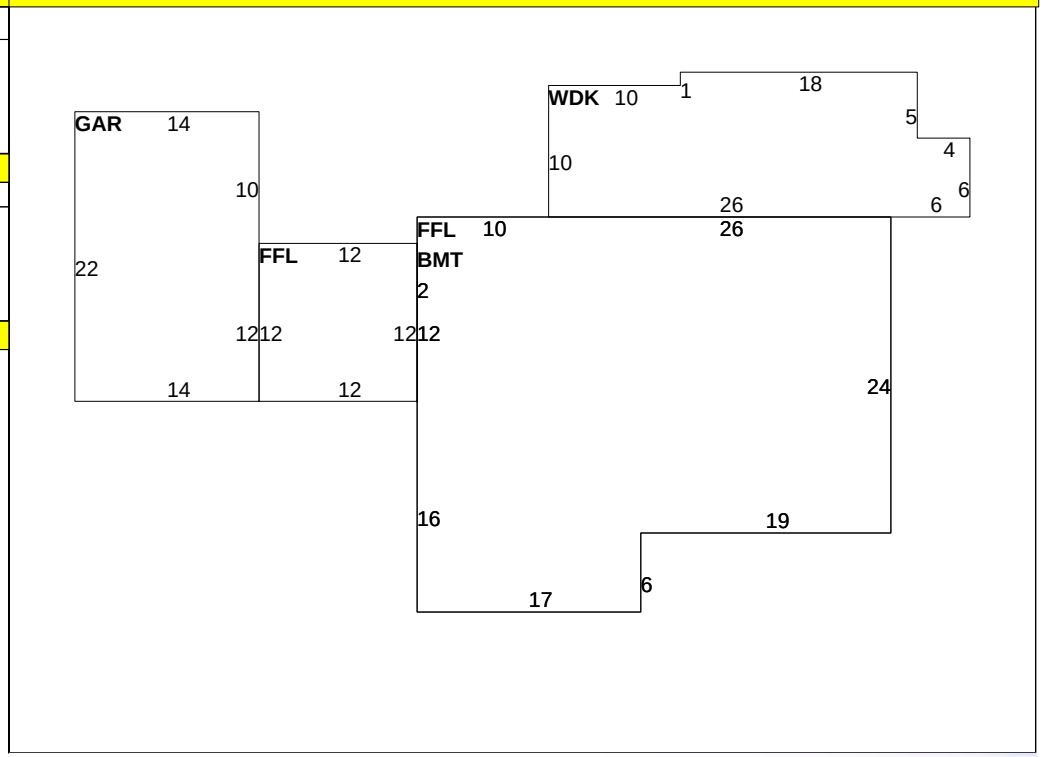

OB-OUTBUILDING & YARD ITEMS(L) / XF-BUILDING EXTRA FEATURES(B)

Code	Description	Sub	Sub Descript	L/B	Units	Unit Price	Yr	Gde	Dp Rt	Cnd	%Cnd	Apr Value
11	POOL I-V	OB	Outbuilding	L	1,152	29.00	2001	A		AV	60	20,000
02	SHED/FR			L	128	7.48	2001	A		AV	60	600

BUILDING SUB-AREA SUMMARY SECTION

Code	Description	Living Area	Gross Area	Eff. Area	Unit Cost	Undeprec. Value
BMT	BASEMENT	0	966		20.55	19,848
FFL	1ST FLOOR	1,110	1,110		102.84	114,152
GAR	GARAGE	0	308		41.07	12,649
WDK	WOOD DECK	0	322		14.37	4,628
	Ttl. Gross Liv/Lease Area:	1,110	2,706	1,471		151,277