Property Location: 16 EUCLID AV | **MAP ID: 2C/ 55/ 115/ /** | **Bldg Name:** | **State Use: 104**

Vision ID: 2516 | **Account #2559** | **Bldg #: 1 of 1** | **Sec #: 1 of 1** | **Card 1 of 1** | **Print Date: 11/25/2015 15:02**

CURRENT OWNER	TOPO.	UTILITIES	STRT./ROAD	LOCATION
ZUCCO RICHARD P + ALICE V		1 TYPCL		
ZUCCO ANTHONY E				
16 EUCLID AV				
EAST LONGMEADOW, MA 01028				
Additional Owners:				

SUPPLEMENTAL DATA

Other ID:	Received
SP Permit	Prior ID
Chapter Land	Owner Occ
OC Dates	Final Area
In+Ex FY	Current Ac.
Mailed	
GIS ID: F_376060_2854656	ASSOC PID#

CURRENT ASSESSMENT

Description	Code	Appraised Value	Assessed Value
RESIDNTL.	104	157,500	157,500
RES LAND	104	56,400	56,400
RESIDNTL.	104	5,500	5,500
	Total	219,400	219,400

1006
EAST LONGMEADOW, M

VISION

RECORD OF OWNERSHIP

	BK-VOL/PAGE	SALE DATE	q/u	v/i	SALE PRICE	V.C.
ZUCCO RICHARD P + ALICE V	20250/ 541	04/16/2014	U	I	100	1A
ZUCCO RICHARD P	18756/ 353	05/02/2011	U	I	1	F
ZUCCO RICHARD P ,	11832/ 80	08/28/2001	U	I	1	A
DUBISH VIRGINIA V,	BK-10109-P050	12/22/1997	U	I	1	A
ZUCCO EMILIO J + LENORA V,	03391/ 0137	12/20/1968	U	I	0	
	BK-3353-P152	07/25/1968	U	I	1	A

PREVIOUS ASSESSMENTS (HISTORY)

Yr.	Code	Assessed Value	Yr.	Code	Assessed Value	Yr.	Code	Assessed Value
2015	104	115,600	2014	B	129,000	2013	B	134,100
2015	104	56,400	2014	L	48,100	2013	L	48,600
2015	104	5,500	2014	O	6,400	2013	O	6,400
	Total:	177,500		Total:	183,500		Total:	189,100

EXEMPTIONS

Year	Type	Description	Amount
		Total:	

OTHER ASSESSMENTS

Code	Description	Number	Amount	Comm. Int.

This signature acknowledges a visit by a Data Collector or Assessor

ASSESSING NEIGHBORHOOD

NBHD/ SUB	NBHD Name	Street Index Name	Tracing	Batch
0001/A			104	MF

NOTES

APARTMENT ON SFL INCL`S LOTS 115+116
RENOVATED
2014 ADDITION ADDS LIV RM GAME RM AND
TWO ROOMS ON 2ND FLR

APPRAISED VALUE SUMMARY

Appraised Bldg. Value (Card)	157,500
Appraised XF (B) Value (Bldg)	0
Appraised OB (L) Value (Bldg)	5,500
Appraised Land Value (Bldg)	56,400
Special Land Value	0
Total Appraised Parcel Value	219,400
Valuation Method:	C
Adjustment:	0
Net Total Appraised Parcel Value	**219,400**

BUILDING PERMIT RECORD

Permit ID	Issue Date	Type	Description	Amount	Insp. Date	% Comp.	Date Comp.	Comments
201402013	06/24/2014	4	ADDITION	85,000	03/19/2015	100	03/19/2015	15'X24' TWO STORY W/
56	01/01/1982	MN	Manual Note	0		0		

VISIT/ CHANGE HISTORY

Date	Type	IS	ID	Cd.	Purpose/Result
03/19/2015			317	15	PERMIT VISIT
01/27/2012			317	16	FIELDREV CHG
03/24/2004			250	22	MAILER SENT
11/06/2003			274	2	MEASURED
07/10/1990			131	12	MEAS DENIED

LAND LINE VALUATION SECTION

B #	Use Code	Use Description	Zone	D	Front	Depth	Units		Unit Price	I. Factor	S.A.	Acre Disc	C. Factor	ST. Idx	Adj.	Notes- Adj	Special Pricing Spec Use	Special Pricing Spec Calc	S Adj Fact	Adj. Unit Price	Land Value
1	104	TWO FAM	RC				4,500	SF	15.29	0.8200	3	1.0000	1.00	MF	1.00				1.00	12.54	56,400

Total Card Land Units: 0.10 AC | Parcel Total Land Area: 0.1 AC | Total Land Value: 56,400

Property Location: 16 EUCLID AV **MAP ID:** 2C/ 55/ 115/ / **Bldg Name:** **State Use:** 104

Vision ID: 2516 **Account #** 2559 **Bldg #:** 1 of 1 **Sec #:** 1 of 1 **Card** 1 of 1 **Print Date:** 11/25/2015 15:02

CONSTRUCTION DETAIL

Element	Cd.	Ch.	Description
Style	12		MULTI-CONV
Model	03		MULTI-FAMILY
Grade	C		AVERAGE
Stories	2.5		
Foundation	3		
Exterior Wall 1	4		VINYL
Exterior Wall 2			
Roof Structure	2		HIP
Roof Cover	1		ASPHALT SH
Interior Wall 1	2		PLASTER
Interior Wall 2	1		DRYWALL
Interior Floor 1	4		CARPET
Interior Floor 2	3		HARDWOOD
Heat Fuel	1		OIL
Heat Type	3		FORCED H/W
AC Type	01		NONE
Bedrooms	4		
Full Baths	2		
Half Baths	1		
Extra Fixtures	0		
Total Rooms	12		
Bath Style	A		AVERAGE
Kitchen Style	A		AVERAGE
Kitchens	2		
Extra Kitchens	0		
Frame	1		WOOD
Basement Floor	12		
Bsmt Garage			
Units	2		
WS Flues			
FBM Quality			
Fireplaces	0		

CONSTRUCTION DETAIL (CONTINUED)

Element	Cd.	Ch.	Description
#Heat Sys	1		
Central Vac	0		NO
FBM Sqft			
Int vs Ext	S		

MIXED USE

Code	Description	Percentage
104	TWO FAM	100

COST/MARKET VALUATION

Adj. Base Rate:	67.33
Replace Cost	183,148
AYB	1910
EYB	2000
Dep Code	GD
Remodel Rating	
Year Remodeled	
Dep %	14
Functional Obslnc	
External Obslnc	
Cost Trend Factor	1
Condition	
% Complete	
Overall % Cond	86
Apprais Val	157,500
Dep % Ovr	0
Dep Ovr Comment	
Misc Imp Ovr	0
Misc Imp Ovr Comment	
Cost to Cure Ovr	0
Cost to Cure Ovr Comment	

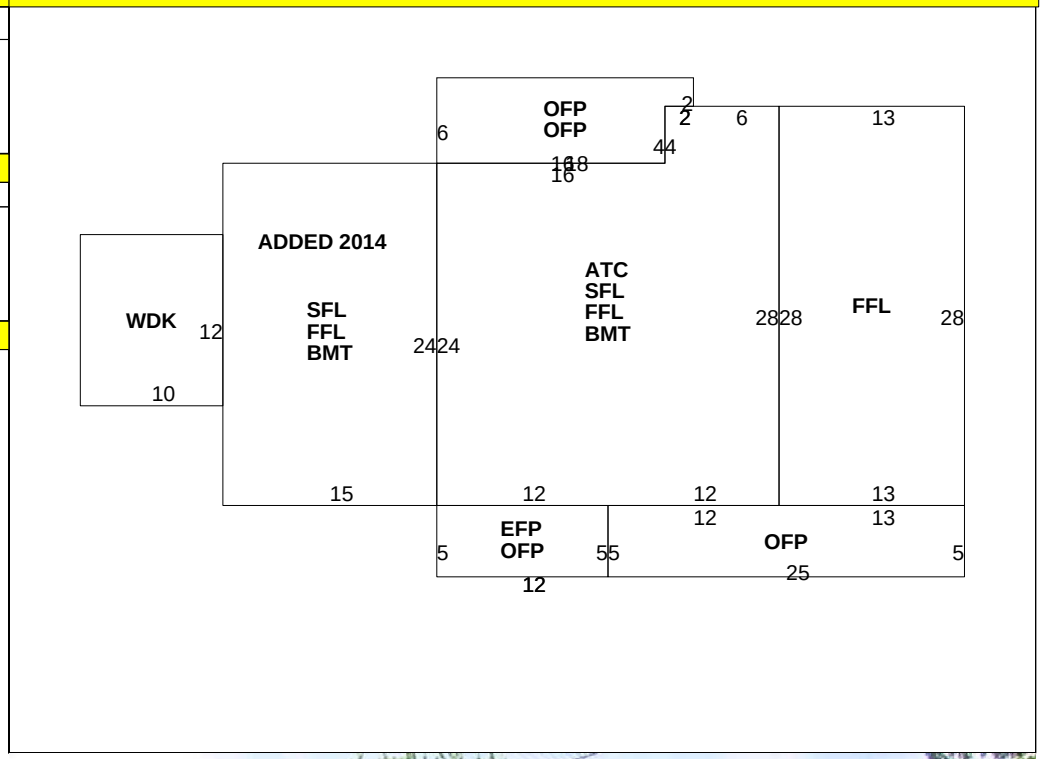

OB-OUTBUILDING & YARD ITEMS(L) / XF-BUILDING EXTRA FEATURES(B)

Code	Description	Sub	Sub Descript	L/B	Units	Unit Price	Yr	Gde	Dp Rt	Cnd	%Cnd	Apr Value
03	GARAGE	OB	Outbuilding	L	324	28.18	1945	A		AV	60	5,500

BUILDING SUB-AREA SUMMARY SECTION

Code	Description	Living Area	Gross Area	Eff. Area	Unit Cost	Undeprec. Value
ATC	ATTIC	152	608		16.83	10,235
BMT	BASEMENT	0	968		13.49	13,063
EFP	ENCL PORCH	0	60		20.20	1,212
FFL	1ST FLOOR	1,332	1,332		67.33	89,689
OFP	OPEN PORCH	0	385		6.82	2,626
SFL	2ND FLOOR	968	968		67.33	65,179
WDK	WOOD DECK	0	120		9.54	1,145
	Ttl. Gross Liv/Lease Area:	2,452	4,441	2,720		183,148