Property Location: 182 PLEASANT ST | **MAP ID: 37/ 29/ 0/ /** | **Bldg Name:** | **State Use: 101**

Vision ID: 3044 | **Account #3094** | **Bldg #: 1 of 1** | **Sec #: 1 of 1** | **Card 1 of 1** | **Print Date: 11/30/2015 09:20**

CURRENT OWNER	TOPO.	UTILITIES	STRT./ROAD	LOCATION
DICKSON LEN H		1 TYPCL		
DICKSON JODIE A				
182 PLEASANT ST				
EAST LONGMEADOW, MA 01028				
Additional Owners:				

SUPPLEMENTAL DATA

Other ID:	Received
SP Permit	Prior ID
Chapter Land	Owner Occ
OC Dates	Final Area
In+Ex FY	Current Ac.
Mailed	
GIS ID: F_383749_2851894	ASSOC PID#

CURRENT ASSESSMENT

Description	Code	Appraised Value	Assessed Value
RESIDNTL.	101	115,200	115,200
RES LAND	101	80,800	80,800
RESIDNTL.	101	13,000	13,000
Total		209,000	209,000

1006
AST LONGMEADOW, M

VISION

RECORD OF OWNERSHIP

	BK-VOL/PAGE	SALE DATE	q/u	v/i	SALE PRICE	V.C.
DICKSON LEN H	15215/ 555	08/01/2005	U	I	203,000	
MOYER JOYCE S +,	09528/ 0354	06/21/1996	U	I	1	A
GALE PHILIP E	02432/ 0352	11/21/1955	U	I	0	

PREVIOUS ASSESSMENTS (HISTORY)

Yr.	Code	Assessed Value	Yr.	Code	Assessed Value	Yr.	Code	Assessed Value
2015	101	115,200	2014	B	109,100	2013	B	116,400
2015	101	80,800	2014	L	83,300	2013	L	83,300
2015	101	13,000	2014	O	14,500	2013	O	14,500
	Total:	209,000		Total:	206,900		Total:	214,200

EXEMPTIONS

Year	Type	Description	Amount
		Total:	

OTHER ASSESSMENTS

Code	Description	Number	Amount	Comm. Int.

This signature acknowledges a visit by a Data Collector or Assessor

APPRAISED VALUE SUMMARY

Appraised Bldg. Value (Card)	115,200
Appraised XF (B) Value (Bldg)	0
Appraised OB (L) Value (Bldg)	13,000
Appraised Land Value (Bldg)	80,800
Special Land Value	0
Total Appraised Parcel Value	209,000
Valuation Method:	C
Adjustment:	0
Net Total Appraised Parcel Value	**209,000**

ASSESSING NEIGHBORHOOD

NBHD/ SUB	NBHD Name	Street Index Name	Tracing	Batch
0001/A			101	MA

NOTES

TOILET OFF KITCHEN OFP = OSP

BUILDING PERMIT RECORD

Permit ID	Issue Date	Type	Description	Amount	Insp. Date	% Comp.	Date Comp.	Comments

VISIT/ CHANGE HISTORY

Date	Type	IS	ID	Cd.	Purpose/Result
11/15/2013			317	2	MEASURED
11/21/2002			274	3	MEAS+INSPCTD
02/18/1982			170	3	MEAS+INSPCTD
10/07/1980			500	3	MEAS+INSPCTD

LAND LINE VALUATION SECTION

B #	Use Code	Use Description	Zone	D	Front	Depth	Units		Unit Price	I. Factor	S.A.	Acre Disc	C. Factor	ST. Idx	Adj.	Notes- Adj	Special Pricing Spec Use		Spec Calc		S Adj Fact	Adj. Unit Price	Land Value
1	101	ONE FAM	RA				40,000	SF	2.20	1.0000	5	1.0000	1.00	MA	1.00				TRF2	.90	.90	1.98	79,200
1	101	ONE FAM	RA				0.23	AC	7,000.00	1.0000	0	1.0000	1.00	MA	1.00						1.00	7,000.00	1,600

Total Card Land Units: 1.15 AC | **Parcel Total Land Area:** 1.15 AC | **Total Land Value:** 80,800

Property Location: 182 PLEASANT ST **MAP ID:** 37/ 29/ 0/ / **Bldg Name:** **State Use:** 101

Vision ID: 3044 **Account #**3094 **Bldg #:** 1 of 1 **Sec #:** 1 of 1 **Card** 1 of 1 **Print Date:** 11/30/2015 09:20

CONSTRUCTION DETAIL

Element	Cd.	Ch.	Description
Style	06		COLONIAL
Model	01		RESIDENTIAL
Grade	C+		AVG. (+)
Stories	2.00		2 Story
Foundation	3		MASONRY
Exterior Wall 1	3		ALUMINUM
Exterior Wall 2			
Roof Structure	1		GABLE
Roof Cover	1		ASPHALT SH
Interior Wall 1	2		PLASTER
Interior Wall 2			
Interior Floor 1	4		CARPET
Interior Floor 2	6		CERAMIC TL
Heat Fuel	1		OIL
Heat Type	1		FORCED H/A
AC Type	03		FULL
Bedrooms	3		
Full Baths	1		
Half Baths	0		
Extra Fixtures	2		
Total Rooms	8		
Bath Style	A		AVERAGE
Kitchen Style	A		AVERAGE
Kitchens	1		
Extra Kitchens	0		
Frame	1		WOOD
Basement Floor	12		
Bsmt Garage			
Units	1		
WS Flues			
FBM Quality			
Fireplaces	0		

CONSTRUCTION DETAIL (CONTINUED)

Element	Cd.	Ch.	Description
#Heat Sys	1		
Central Vac	0		NO
FBM Sqft			
Int vs Ext	S		

MIXED USE

Code	Description	Percentage
101	ONE FAM	100

COST/MARKET VALUATION

Adj. Base Rate:	90.29
Replace Cost	188,788
AYB	1900
EYB	1975
Dep Code	AV
Remodel Rating	
Year Remodeled	
Dep %	39
Functional Obslnc	
External Obslnc	
Cost Trend Factor	1
Condition	
% Complete	
Overall % Cond	61
Apprais Val	115,200
Dep % Ovr	0
Dep Ovr Comment	
Misc Imp Ovr	0
Misc Imp Ovr Comment	
Cost to Cure Ovr	0
Cost to Cure Ovr Comment	

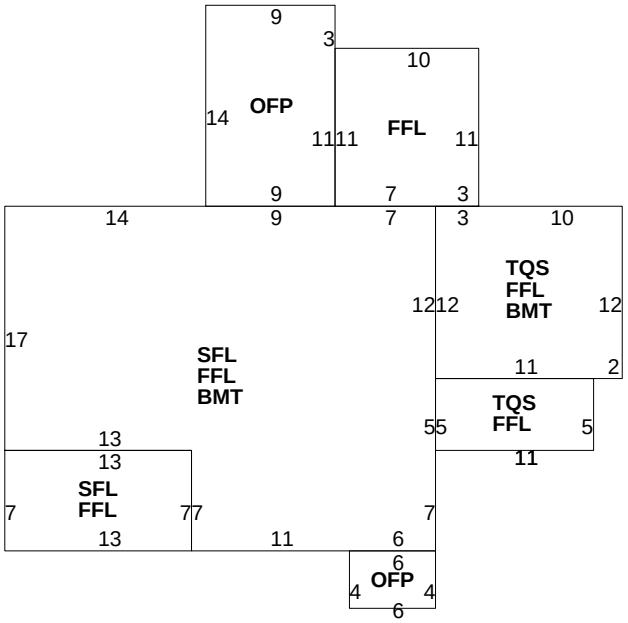

OB-OUTBUILDING & YARD ITEMS(L) / XF-BUILDING EXTRA FEATURES(B)

Code	Description	Sub	Sub Descript	L/B	Units	Unit Price	Yr	Gde	Dp Rt	Cnd	%Cnd	Apr Value
03	GARAGE	OB	Outbuilding	L	768	28.18	1965	A		AV	60	13,000

BUILDING SUB-AREA SUMMARY SECTION

Code	Description	Living Area	Gross Area	Eff. Area	Unit Cost	Undeprec. Value
BMT	BASEMENT	0	785		18.06	14,175
FFL	1ST FLOOR	1,041	1,041		90.29	93,988
OFP	OPEN PORCH	0	150		9.03	1,354
SFL	2ND FLOOR	720	720		90.29	65,006
TQS	3/4 STORY	158	211		67.61	14,265
	Ttl. Gross Liv/Lease Area:	1,919	2,907	2,091		188,788