Property Location: 791 PARKER ST | **MAP ID: 58/ 56/ 2/ /** | **Bldg Name:** | **State Use: 101**

Vision ID: 4425 | **Account #4495** | **Bldg #: 1 of 1** | **Sec #: 1 of 1** | **Card 1 of 1** | **Print Date: 12/01/2015 08:34**

CURRENT OWNER	TOPO.	UTILITIES	STRT./ROAD	LOCATION
DEWOLF KARA ANN		1 TYPCL		
791 PARKER ST				
EAST LONGMEADOW, MA 01028				
Additional Owners:				

SUPPLEMENTAL DATA

Other ID:	Received
SP Permit	Prior ID
Chapter Land	Owner Occ
OC Dates	Final Area
In+Ex FY	Current Ac.
Mailed	
GIS ID: F_387316_2857995	ASSOC PID#

CURRENT ASSESSMENT

Description	Code	Appraised Value	Assessed Value
RESIDNTL.	101	95,500	95,500
RES LAND	101	85,100	85,100
RESIDNTL.	101	3,700	3,700
Total		184,300	184,300

1006
EAST LONGMEADOW, M

VISION

RECORD OF OWNERSHIP

	BK-VOL/PAGE	SALE DATE	q/u	v/i	SALE PRICE	V.C.
DEWOLF KARA ANN	14837/ 242	02/23/2005	U	I	177,500	
PIENIAK DENNIS B,	07546/ 0365	09/13/1990	U	I	116,000	
KOUTRUBA PAUL R	05430/ 0042	05/02/1983	U	I	55,500	

PREVIOUS ASSESSMENTS (HISTORY)

Yr.	Code	Assessed Value	Yr.	Code	Assessed Value	Yr.	Code	Assessed Value
2015	101	95,500	2014	B	97,900	2013	B	101,700
2015	101	85,100	2014	L	87,900	2013	L	90,500
2015	101	3,700	2014	O	4,700	2013	O	4,800
	Total:	184,300		Total:	190,500		Total:	197,000

EXEMPTIONS

Year	Type	Description	Amount
		Total:	

OTHER ASSESSMENTS

Code	Description	Number	Amount	Comm. Int.

This signature acknowledges a visit by a Data Collector or Assessor

ASSESSING NEIGHBORHOOD

NBHD/ SUB	NBHD Name	Street Index Name	Tracing	Batch
0001/A			101	MG

NOTES

NEW ROOF/WINDOWS/DOORS

APPRAISED VALUE SUMMARY

Appraised Bldg. Value (Card)	95,500
Appraised XF (B) Value (Bldg)	0
Appraised OB (L) Value (Bldg)	3,700
Appraised Land Value (Bldg)	85,100
Special Land Value	0
Total Appraised Parcel Value	184,300
Valuation Method:	C
Adjustment:	0
Net Total Appraised Parcel Value	**184,300**

BUILDING PERMIT RECORD

Permit ID	Issue Date	Type	Description	Amount	Insp. Date	% Comp.	Date Comp.	Comments
201302006	05/22/2013	91	INSULATION	2,575		100	05/15/2014	

VISIT/ CHANGE HISTORY

Date	Type	IS	ID	Cd.	Purpose/Result
05/01/2009			317	2	MEASURED
10/11/2001			250	22	MAILER SENT
10/02/2001			247	2	MEASURED
06/29/1992			190	1	LEFT NOTICE
01/28/1981			500	1	LEFT NOTICE

LAND LINE VALUATION SECTION

B #	Use Code	Use Description	Zone	D	Front	Depth	Units		Unit Price	I. Factor	S.A.	Acre Disc	C. Factor	ST. Idx	Adj.	Notes- Adj	Special Pricing Spec Use		Spec Calc		S Adj Fact	Adj. Unit Price	Land Value
1	101	ONE FAM	RA				14,400	SF	5.52	1.1900	7	1.0000	1.00	MG	1.00				TRF1	.90	.90	5.91	85,100

Total Card Land Units: 0.33 AC | **Parcel Total Land Area:** 0.33 AC | **Total Land Value:** 85,100

Property Location: 791 PARKER ST **MAP ID:** 58/ 56/ 2/ / **Bldg Name:** **State Use:** 101

Vision ID: 4425 **Account #** 4495 **Bldg #:** 1 of 1 **Sec #:** 1 of 1 **Card** 1 of 1 **Print Date:** 12/01/2015 08:34

CONSTRUCTION DETAIL

Element	Cd.	Ch.	Description
Style	19		RANCH
Model	01		RESIDENTIAL
Grade	C		AVERAGE
Stories	1.00		1 Story
Foundation	1		CONCRETE
Exterior Wall 1	7		BRICK
Exterior Wall 2			
Roof Structure	1		GABLE
Roof Cover	1		ASPHALT SH
Interior Wall 1	2		PLASTER
Interior Wall 2			
Interior Floor 1	3		HARDWOOD
Interior Floor 2			
Heat Fuel	2		GAS
Heat Type	5		STEAM
AC Type	01		NONE
Bedrooms	2		
Full Baths	1		
Half Baths	0		
Extra Fixtures	0		
Total Rooms	5		
Bath Style	A		AVERAGE
Kitchen Style	A		AVERAGE
Kitchens	1		
Extra Kitchens	0		
Frame	1		WOOD
Basement Floor	12		
Bsmt Garage			
Units	1		
WS Flues			
FBM Quality			
Fireplaces	2		

CONSTRUCTION DETAIL (CONTINUED)

Element	Cd.	Ch.	Description
#Heat Sys	1		
Central Vac	0		NO
FBM Sqft			
Int vs Ext	S		

MIXED USE

Code	Description	Percentage
101	ONE FAM	100

COST/MARKET VALUATION

Adj. Base Rate:	91.47
Replace Cost	144,710
AYB	1946
EYB	1980
Dep Code	AG
Remodel Rating	
Year Remodeled	
Dep %	34
Functional Obslnc	
External Obslnc	
Cost Trend Factor	1
Condition	
% Complete	
Overall % Cond	66
Apprais Val	95,500
Dep % Ovr	0
Dep Ovr Comment	
Misc Imp Ovr	0
Misc Imp Ovr Comment	
Cost to Cure Ovr	0
Cost to Cure Ovr Comment	

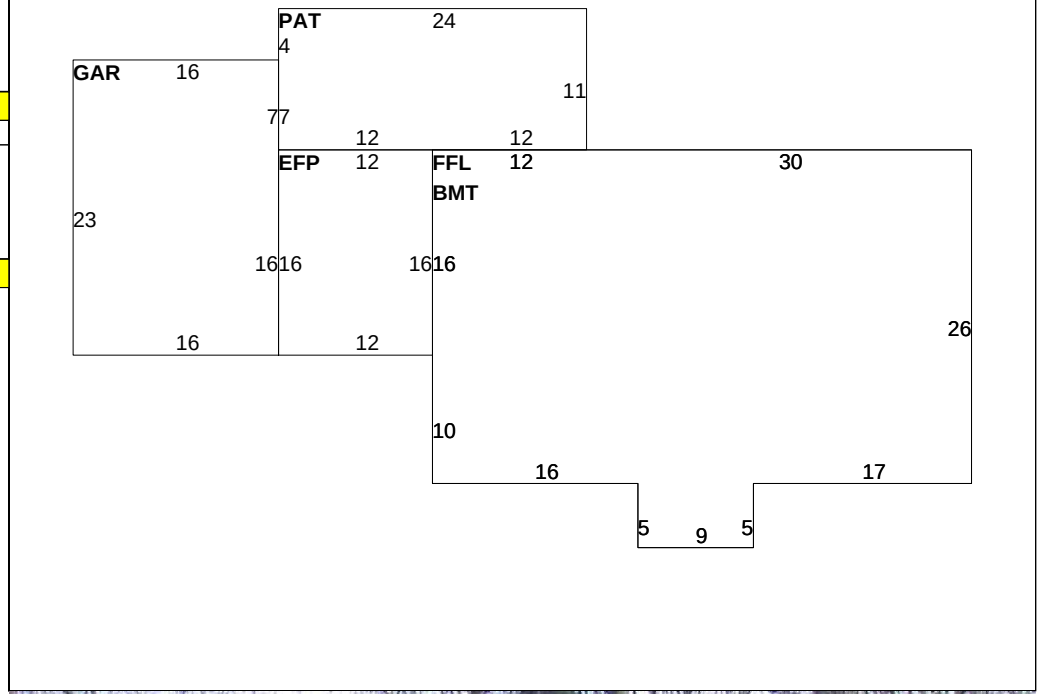

OB-OUTBUILDING & YARD ITEMS(L) / XF-BUILDING EXTRA FEATURES(B)

Code	Description	Sub	Sub Descript	L/B	Units	Unit Price	Yr	Gde	Dp Rt	Cnd	%Cnd	Apr Value
02	SHED/FR			L	120	7.48	1995	V		AV	60	800
06	CARPORT			L	552	8.63	1995	A		AV	60	2,900

BUILDING SUB-AREA SUMMARY SECTION

Code	Description	Living Area	Gross Area	Eff. Area	Unit Cost	Undeprec. Value
BMT	BASEMENT	0	1,137		18.26	20,764
EFP	ENCL PORCH	0	192		27.63	5,305
FFL	1ST FLOOR	1,137	1,137		91.47	104,005
GAR	GARAGE	0	368		36.54	13,447
PAT	PATIO	0	264		4.50	1,189
	Ttl. Gross Liv/Lease Area:	1,137	3,098	1,582		144,710