Property Location: 566 PARKER ST | **MAP ID: 60/ 34/ 12/ /** | **Bldg Name:** | **State Use: 101**

Vision ID: 4666 | **Account #4739** | **Bldg #: 1 of 1** | **Sec #: 1 of 1** | **Card 1 of 1** | **Print Date: 12/01/2015 09:44**

CURRENT OWNER	TOPO.	UTILITIES	STRT./ROAD	LOCATION
THE SECRETARY OF HOUSING + URB		1 TYPCL		
C/O MICHAELSON CONNOR + BOUL				
4400 WILL ROGERS PKWY-STE300				
OKLAHOMA CITY, OK 73108				
Additional Owners:				

SUPPLEMENTAL DATA

Other ID:	Received
SP Permit	Prior ID
Chapter Land	Owner Occ
OC Dates	Final Area
In+Ex FY	Current Ac.
Mailed	
GIS ID: F_388165_2853748	ASSOC PID#

CURRENT ASSESSMENT

Description	Code	Appraised Value	Assessed Value
RESIDNTL.	101	203,400	203,400
RES LAND	101	93,200	93,200
RESIDNTL.	101	21,200	21,200
Total		317,800	317,800

1006
EAST LONGMEADOW, M

VISION

RECORD OF OWNERSHIP

	BK-VOL/PAGE	SALE DATE	q/u	v/i	SALE PRICE	V.C.
S + C HOMEBUYERS LLC	20597/ 520	02/17/2015	U	I	220,000	1L
THE SECRETARY OF HOUSING + URBAN DEVELOP	20494/ 331	11/10/2014	U	I	10	1L
CONNORS PAUL R + PAGE JULIE A	20170/ 375	01/21/2014	U	I	358,097	1L
CONNORS PAUL R + PAGE JULIE A C/O	17942/ 93	08/17/2009	U	I	315,000	
GRALIA ERNEST A JR + ROSEMARIE,C/O DONAL	14191/ 504	05/24/2004	U	I	1	A
GRALIA,ERNEST A III TRUSTEE	11012/ 089	11/23/1999	U	I	1	A

PREVIOUS ASSESSMENTS (HISTORY)

Yr.	Code	Assessed Value	Yr.	Code	Assessed Value	Yr.	Code	Assessed Value
2015	101	184,000	2014	B	183,500	2013	B	179,700
2015	101	93,200	2014	L	96,400	2013	L	99,300
2015	101	18,700	2014	O	20,200	2013	O	20,300
	Total:	295,900		Total:	300,100		Total:	299,300

EXEMPTIONS

Year	Type	Description	Amount
		Total:	

OTHER ASSESSMENTS

Code	Description	Number	Amount	Comm. Int.

This signature acknowledges a visit by a Data Collector or Assessor

ASSESSING NEIGHBORHOOD

NBHD/ SUB	NBHD Name	Street Index Name	Tracing	Batch
0001/A			101	MG

NOTES

2015 LIST PRICE $354,900

NC=INSPECT AT SALE OR UPON OC

APPRAISED VALUE SUMMARY

Appraised Bldg. Value (Card)	203,400
Appraised XF (B) Value (Bldg)	0
Appraised OB (L) Value (Bldg)	21,200
Appraised Land Value (Bldg)	93,200
Special Land Value	0
Total Appraised Parcel Value	317,800
Valuation Method:	C
Adjustment:	0
Net Total Appraised Parcel Value	**317,800**

BUILDING PERMIT RECORD

Permit ID	Issue Date	Type	Description	Amount	Insp. Date	% Comp.	Date Comp.	Comments
201501320	04/24/2015	12	REROOF	6,500	05/22/2015	100	05/22/2015	
201500539	03/18/2015	7	REMODEL	30,000	05/22/2015	100	05/22/2015	COMPLETE INT REMO

VISIT/ CHANGE HISTORY

Date	Type	IS	ID	Cd.	Purpose/Result
05/22/2015			317	15	PERMIT VISIT
09/25/2009			317	3	MEAS+INSPCTD
05/23/2008			317	14	INSPECTED
05/15/2008			317	2	MEASURED
11/17/2001			247	14	INSPECTED

LAND LINE VALUATION SECTION

B #	Use Code	Use Description	Zone	D	Front	Depth	Units		Unit Price	I. Factor	S.A.	Acre Disc	C. Factor	ST. Idx	Adj.	Notes- Adj	Special Pricing Spec Use		Spec Calc		S Adj Fact	Adj. Unit Price	Land Value
1	101	ONE FAM	RA				37,902	SF	2.30	1.1900	7	1.0000	1.00	MG	1.00				TRF1	.90	.90	2.46	93,200

Total Card Land Units: 0.87 AC | **Parcel Total Land Area:** 0.87 AC | **Total Land Value:** 93,200

Property Location: 566 PARKER ST **MAP ID:** 60/ 34/ 12/ / **Bldg Name:** **State Use:** 101

Vision ID: 4666 **Account #**4739 **Bldg #:** 1 of 1 **Sec #:** 1 of 1 **Card** 1 of 1 **Print Date:** 12/01/2015 09:44

CONSTRUCTION DETAIL

Element	Cd.	Ch.	Description
Style	05		CAPE
Model	01		RESIDENTIAL
Grade	C+		AVG. (+)
Stories	1.75		1 3/4 STORIES
Foundation	1		CONCRETE
Exterior Wall 1	1		WOOD SHING
Exterior Wall 2	8		BRICK VENR
Roof Structure	1		GABLE
Roof Cover	1		ASPHALT SH
Interior Wall 1	1		DRYWALL
Interior Wall 2			
Interior Floor 1	3		HARDWOOD
Interior Floor 2	4		CARPET
Heat Fuel	1		OIL
Heat Type	3		FORCED H/W
AC Type	03		FULL
Bedrooms	4		
Full Baths	2		
Half Baths	1		
Extra Fixtures	1		
Total Rooms	8		
Bath Style	G		GOOD
Kitchen Style	G		GOOD
Kitchens	1		
Extra Kitchens	0		
Frame	1		WOOD
Basement Floor	12		CONCRETE
Bsmt Garage			
Units	1		
WS Flues			
FBM Quality	2		
Fireplaces	1		

CONSTRUCTION DETAIL (CONTINUED)

Element	Cd.	Ch.	Description
#Heat Sys	1		
Central Vac	1		YES
FBM Sqft	663		
Int vs Ext	S		SAME

MIXED USE

Code	Description	Percentage
101	ONE FAM	100

COST/MARKET VALUATION

Adj. Base Rate:	93.97
Replace Cost	239,352
AYB	1965
EYB	1999
Dep Code	GV
Remodel Rating	
Year Remodeled	
Dep %	15
Functional Obslnc	
External Obslnc	
Cost Trend Factor	1
Condition	NC
% Complete	85
Overall % Cond	85
Apprais Val	203,400
Dep % Ovr	0
Dep Ovr Comment	
Misc Imp Ovr	0
Misc Imp Ovr Comment	
Cost to Cure Ovr	0
Cost to Cure Ovr Comment	

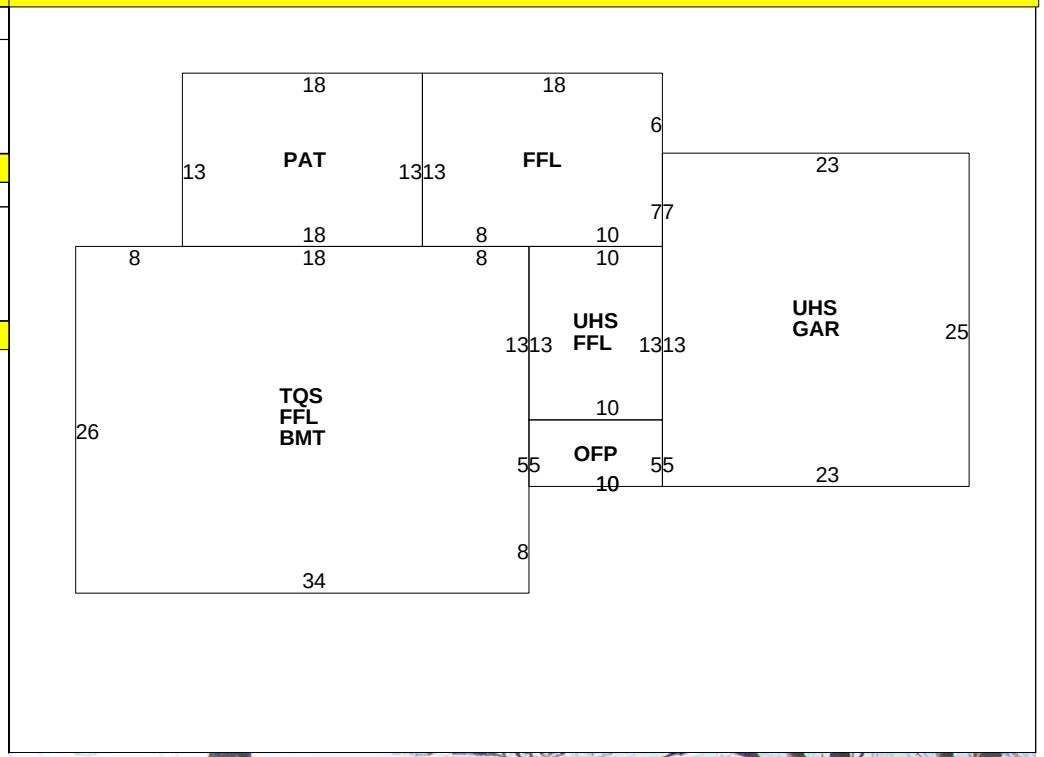

OB-OUTBUILDING & YARD ITEMS(L) / XF-BUILDING EXTRA FEATURES(B)

Code	Description	Sub	Sub Descript	L/B	Units	Unit Price	Yr	Gde	Dp Rt	Cnd	%Cnd	Apr Value
03	GARAGE	OB	Outbuilding	L	200	28.18	1974	G		VG	85	6,000
11	POOL I-V	OB	Outbuilding	L	512	29.00	1974	G		GD	70	13,000
19	PATIO			L	400	5.75	1975	A		AV	60	1,400
02	SHED/FR			L	80	7.48	1975	A		GD	70	400
02	SHED/FR			L	80	7.48	2015	A		GD	70	400

BUILDING SUB-AREA SUMMARY SECTION

Code	Description	Living Area	Gross Area	Eff. Area	Unit Cost	Undeprec. Value
BMT	BASEMENT	0	884		18.82	16,633
FFL	1ST FLOOR	1,248	1,248		93.97	117,280
GAR	GARAGE	0	575		37.59	21,614
OFP	OPEN PORCH	0	50		9.40	470
PAT	PATIO	0	234		4.82	1,128
TQS	3/4 STORY	663	884		70.48	62,305
UHS	UNFIN HALF STORY	0	705		28.26	19,923
	Ttl. Gross Liv/Lease Area:	1,911	4,580	2,547		239,352