Property Location: 48 PILGRIM RD | **MAP ID: 61/ 13/ 34/ /** | **Bldg Name:** | **State Use: 101**

Vision ID: 4703 | **Account #4776** | **Bldg #: 1 of 1** | **Sec #: 1 of 1** | **Card 1 of 1** | **Print Date: 12/01/2015 09:52**

CURRENT OWNER	TOPO.	UTILITIES	STRT./ROAD	LOCATION
DEARY MICHAEL R		1 TYPCL		
48 PILGRIM RD				
EAST LONGMEADOW, MA 01028				
Additional Owners:				

SUPPLEMENTAL DATA

Other ID:	Received
SP Permit	Prior ID
Chapter Land	Owner Occ
OC Dates	Final Area
In+Ex FY	Current Ac.
Mailed	
GIS ID: F_387522_2853134	ASSOC PID#

CURRENT ASSESSMENT

Description	Code	Appraised Value	Assessed Value
RESIDNTL.	101	231,800	231,800
RES LAND	101	102,400	102,400
RESIDNTL.	101	400	400
	Total	334,600	334,600

1006
EAST LONGMEADOW, M

VISION

RECORD OF OWNERSHIP

	BK-VOL/PAGE	SALE DATE	q/u	v/i	SALE PRICE	V.C.
DEARY MICHAEL R	05563/ 0254	02/01/1984	U	I	121,000	I

PREVIOUS ASSESSMENTS (HISTORY)

Yr.	Code	Assessed Value	Yr.	Code	Assessed Value	Yr.	Code	Assessed Value
2015	101	231,800	2014	B	233,600	2013	B	230,300
2015	101	102,400	2014	L	105,700	2013	L	107,600
2015	101	400	2014	O	400	2013	O	400
	Total:	334,600		Total:	339,700		Total:	338,300

EXEMPTIONS

Year	Type	Description	Amount
		Total:	

OTHER ASSESSMENTS

Code	Description	Number	Amount	Comm. Int.

This signature acknowledges a visit by a Data Collector or Assessor

ASSESSING NEIGHBORHOOD

NBHD/ SUB	NBHD Name	Street Index Name	Tracing	Batch
0001/A			101	MG

NOTES

REMODEL KITCHEN 1997 FPL=GAS

APPRAISED VALUE SUMMARY

Appraised Bldg. Value (Card)	231,800
Appraised XF (B) Value (Bldg)	0
Appraised OB (L) Value (Bldg)	400
Appraised Land Value (Bldg)	102,400
Special Land Value	0
Total Appraised Parcel Value	334,600
Valuation Method:	C
Adjustment:	0
Net Total Appraised Parcel Value	**334,600**

BUILDING PERMIT RECORD

Permit ID	Issue Date	Type	Description	Amount	Insp. Date	% Comp.	Date Comp.	Comments
366	11/19/2008	9	ALTERATION	35,670		0		WINDOWS & SIDING
60	04/24/1997	MN	Manual Note	30,000		0		REMODEL

VISIT/ CHANGE HISTORY

Date	Type	IS	ID	Cd.	Purpose/Result
06/06/2008			317	14	INSPECTED
05/23/2008			317	13	MISSED APPT
04/24/2008			250	22	MAILER SENT
11/16/2007			317	2	MEASURED
11/16/2007			317	15	PERMIT VISIT

LAND LINE VALUATION SECTION

B #	Use Code	Use Description	Zone	D	Front	Depth	Units		Unit Price	I. Factor	S.A.	Acre Disc	C. Factor	ST. Idx	Adj.	Notes- Adj	Special Pricing Spec Use	Special Pricing Spec Calc	S Adj Fact	Adj. Unit Price	Land Value
1	101	ONE FAM	RA				34,247	SF	2.51	1.1900	7	1.0000	1.00	MG	1.00				1.00	2.99	102,400

Total Card Land Units: 0.79 AC | Parcel Total Land Area: 0.79 AC | Total Land Value: 102,400

Property Location: 48 PILGRIM RD **MAP ID:** 61/ 13/ 34/ / **Bldg Name:** **State Use:** 101

Vision ID: 4703 **Account #**4776 **Bldg #:** 1 of 1 **Sec #:** 1 of 1 **Card** 1 of 1 **Print Date:** 12/01/2015 09:52

CONSTRUCTION DETAIL

Element	Cd.	Ch.	Description
Style	06		COLONIAL
Model	01		RESIDENTIAL
Grade	C+		AVG. (+)
Stories	2.00		2 Story
Foundation	1		
Exterior Wall 1	4		VINYL
Exterior Wall 2	8		BRICK VENR
Roof Structure	2		HIP
Roof Cover	1		ASPHALT SH
Interior Wall 1	1		DRYWALL
Interior Wall 2	4		SOLID WOOD
Interior Floor 1	4		CARPET
Interior Floor 2	3		HARDWOOD
Heat Fuel	2		GAS
Heat Type	1		FORCED H/A
AC Type	03		FULL
Bedrooms	4		
Full Baths	3		
Half Baths	0		
Extra Fixtures	1		
Total Rooms	8		
Bath Style	G		GOOD
Kitchen Style	G		GOOD
Kitchens	1		
Extra Kitchens	0		
Frame	1		WOOD
Basement Floor	12		
Bsmt Garage			
Units	1		
WS Flues			
FBM Quality	3		
Fireplaces	1		

CONSTRUCTION DETAIL (CONTINUED)

Element	Cd.	Ch.	Description
#Heat Sys	1		
Central Vac	1		YES
FBM Sqft	785		
Int vs Ext	S		

MIXED USE

Code	Description	Percentage
101	ONE FAM	100

COST/MARKET VALUATION

Adj. Base Rate:	90.23
Replace Cost	269,522
AYB	1971
EYB	2000
Dep Code	VG
Remodel Rating	
Year Remodeled	
Dep %	14
Functional Obslnc	
External Obslnc	
Cost Trend Factor	1
Condition	
% Complete	
Overall % Cond	86
Apprais Val	231,800
Dep % Ovr	0
Dep Ovr Comment	
Misc Imp Ovr	0
Misc Imp Ovr Comment	
Cost to Cure Ovr	0
Cost to Cure Ovr Comment	

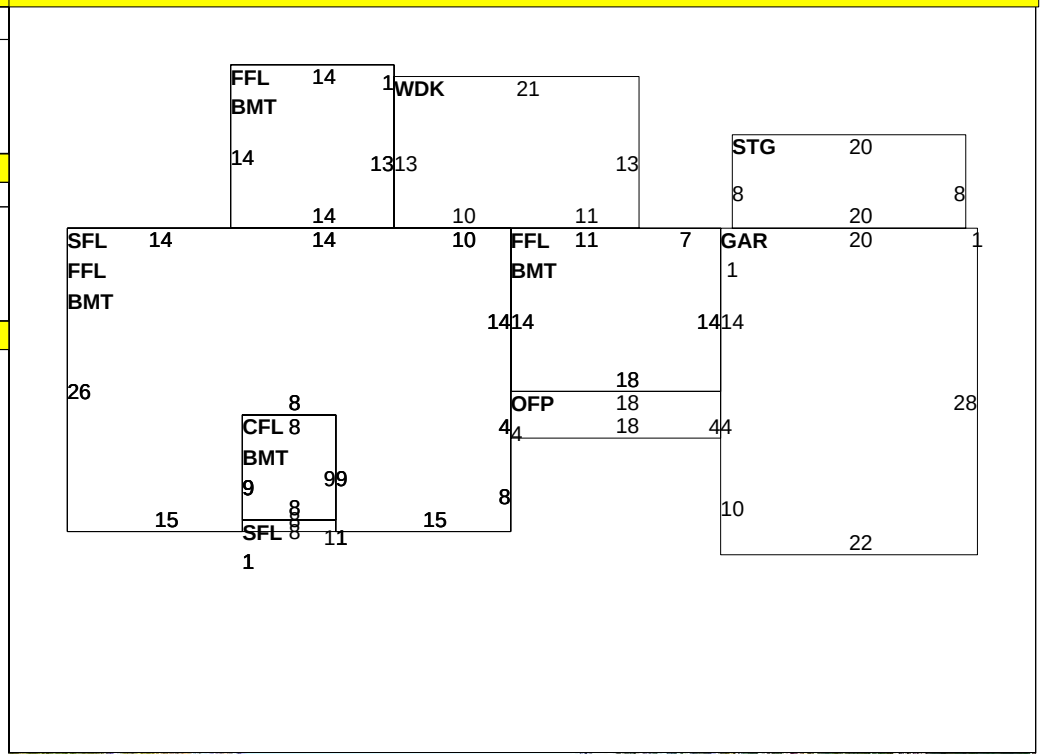

OB-OUTBUILDING & YARD ITEMS(L) / XF-BUILDING EXTRA FEATURES(B)

Code	Description	Sub	Sub Descript	L/B	Units	Unit Price	Yr	Gde	Dp Rt	Cnd	%Cnd	Apr Value
02	SHED/FR			L	96	7.48	1980	A		AV	60	400

BUILDING SUB-AREA SUMMARY SECTION

Code	Description	Living Area	Gross Area	Eff. Area	Unit Cost	Undeprec. Value
BMT	BASEMENT	0	1,428		18.07	25,806
CFL	CATHEDRAL CE	72	72		92.74	6,677
FFL	1ST FLOOR	1,356	1,356		90.23	122,354
GAR	GARAGE	0	616		36.03	22,197
OFP	OPEN PORCH	0	72		8.77	632
SFL	2ND FLOOR	916	916		90.23	82,652
STG	STORAGE	0	160		36.09	5,775
WDK	WOOD DECK	0	273		12.56	3,429
	Ttl. Gross Liv/Lease Area:	2,344	4,893	2,987		269,522