Property Location: 48 TERRY LN | **MAP ID: 76/ 82/ 3/ /** | **Bldg Name:** | **State Use: 101**

Vision ID: 5455 | **Account #5533** | **Bldg #: 1 of 1** | **Sec #: 1 of 1** | **Card 1 of 1** | **Print Date: 12/01/2015 12:56**

CURRENT OWNER	TOPO.	UTILITIES	STRT./ROAD	LOCATION
PIXLEY NOEL P PIXLEY LAURA M 48 TERRY LN EAST LONGMEADOW, MA 01028 Additional Owners:				

SUPPLEMENTAL DATA

Other ID:	Received
SP Permit	Prior ID
Chapter Land	Owner Occ
OC Dates	Final Area
In+Ex FY	Current Ac.
Mailed	
GIS ID: F_390548_2847533	ASSOC PID#

CURRENT ASSESSMENT

Description	Code	Appraised Value	Assessed Value
RESIDNTL.	101	278,100	278,100
RES LAND	101	104,800	104,800
RESIDNTL.	101	5,100	5,100
	Total	388,000	388,000

1006
AST LONGMEADOW, M

VISION

RECORD OF OWNERSHIP

	BK-VOL/PAGE	SALE DATE	q/u	v/i	SALE PRICE	V.C.
PEREIRA MICHAEL B + AMANDA M	20875/ 559	09/18/2015	Q	I	410,000	00
PIXLEY NOEL P	09096/ 0518	03/31/1995	U	I	75,000	
SMITH DONALD J + HELEN V	07065/ 0587	01/04/1989	U	I	1	B
QUIMBY EARL R	06724/ 0491	01/04/1988	U	I	1	B
QUIMBY	06300/ 211	11/24/1986	U	I	1	
DEJONGH	0/ 0		U		0	

PREVIOUS ASSESSMENTS (HISTORY)

Yr.	Code	Assessed Value	Yr.	Code	Assessed Value	Yr.	Code	Assessed Value
2015	101	278,100	2014	B	273,800	2013	B	272,300
2015	101	104,800	2014	L	108,100	2013	L	110,100
2015	101	5,100	2014	O	7,800	2013	O	2,800
	Total:	388,000		Total:	389,700		Total:	385,200

EXEMPTIONS

Year	Type	Description	Amount
		Total:	

OTHER ASSESSMENTS

Code	Description	Number	Amount	Comm. Int.

This signature acknowledges a visit by a Data Collector or Assessor

ASSESSING NEIGHBORHOOD

NBHD/ SUB	NBHD Name	Street Index Name	Tracing	Batch
0001/A			101	MG

NOTES

SUB DIV #568 1996 BP NVC JACUZZI &
SHOWER MASTER BATH

APPRAISED VALUE SUMMARY

Appraised Bldg. Value (Card)	278,100
Appraised XF (B) Value (Bldg)	0
Appraised OB (L) Value (Bldg)	5,100
Appraised Land Value (Bldg)	104,800
Special Land Value	0
Total Appraised Parcel Value	388,000
Valuation Method:	C
Adjustment:	0
Net Total Appraised Parcel Value	**388,000**

BUILDING PERMIT RECORD

Permit ID	Issue Date	Type	Description	Amount	Insp. Date	% Comp.	Date Comp.	Comments
201202925	08/24/2012	17	DECK	3,000		0		340 SF ATTACHED TO I
201202807	07/27/2012	42	REPAIRS	20,000		0		REPARIS TO DORMER
201202457	06/12/2012	11	POOL	4,500		0		27` ABOVE GROUND
4	01/22/1996	20	WOOD STOVE	1,900		0		WOODSTV
111	05/11/1995	2	DWELLING	150,000		0		DWELLING

VISIT/ CHANGE HISTORY

Date	Type	IS	ID	Cd.	Purpose/Result
07/05/2013			317	15	PERMIT VISIT
07/05/2013			317	15	PERMIT VISIT
07/20/2012			317	15	PERMIT VISIT
04/05/2007			311	14	INSPECTED
08/17/2006			311	14	INSPECTED

LAND LINE VALUATION SECTION

B #	Use Code	Use Description	Zone	D	Front	Depth	Units		Unit Price	I. Factor	S.A.	Acre Disc	C. Factor	ST. Idx	Adj.	Notes- Adj	Special Pricing Spec Use	Special Pricing Spec Calc	S Adj Fact	Adj. Unit Price	Land Value
1	101	ONE FAM	RAA				40,019	SF	2.20	1.1900	7	1.0000	1.00	MG	1.00				1.00	2.62	104,800

Total Card Land Units: 0.92 AC | **Parcel Total Land Area:** 0.92 AC | **Total Land Value:** 104,800

Property Location: 48 TERRY LN **MAP ID:** 76/ 82/ 3/ / **Bldg Name:** **State Use:** 101

Vision ID: 5455 **Account #**5533 **Bldg #:** 1 of 1 **Sec #:** 1 of 1 **Card** 1 of 1 **Print Date:** 12/01/2015 12:56

CONSTRUCTION DETAIL

Element	Cd.	Ch.	Description
Style	06		COLONIAL
Model	01		RESIDENTIAL
Grade	B-		GOOD (-)
Stories	2.00		2 STORY
Foundation	1		CONCRETE
Exterior Wall 1	2		CLAPBOARD
Exterior Wall 2	1		WOOD SHING
Roof Structure	2		HIP
Roof Cover	1		ASPHALT SH
Interior Wall 1	1		DRYWALL
Interior Wall 2			
Interior Floor 1	4		CARPET
Interior Floor 2	3		HARDWOOD
Heat Fuel	2		GAS
Heat Type	1		FORCED H/A
AC Type	03		FULL
Bedrooms	3		
Full Baths	2		
Half Baths	1		
Extra Fixtures	3		
Total Rooms	9		
Bath Style	G		GOOD
Kitchen Style	A		AVERAGE
Kitchens	1		
Extra Kitchens	0		
Frame	1		WOOD
Basement Floor	12		CONCRETE
Bsmt Garage			
Units	1		
WS Flues	1		
FBM Quality	1		
Fireplaces	1		

CONSTRUCTION DETAIL (CONTINUED)

Element	Cd.	Ch.	Description
#Heat Sys	1		
Central Vac	1		YES
FBM Sqft	230		
Int vs Ext	S		SAME

MIXED USE

Code	Description	Percentage
101	ONE FAM	100

COST/MARKET VALUATION

Adj. Base Rate:	86.70
Replace Cost	308,986
AYB	1995
EYB	2004
Dep Code	GD
Remodel Rating	
Year Remodeled	
Dep %	10
Functional Obslnc	
External Obslnc	
Cost Trend Factor	1
Condition	
% Complete	
Overall % Cond	90
Apprais Val	278,100
Dep % Ovr	0
Dep Ovr Comment	
Misc Imp Ovr	0
Misc Imp Ovr Comment	
Cost to Cure Ovr	0
Cost to Cure Ovr Comment	

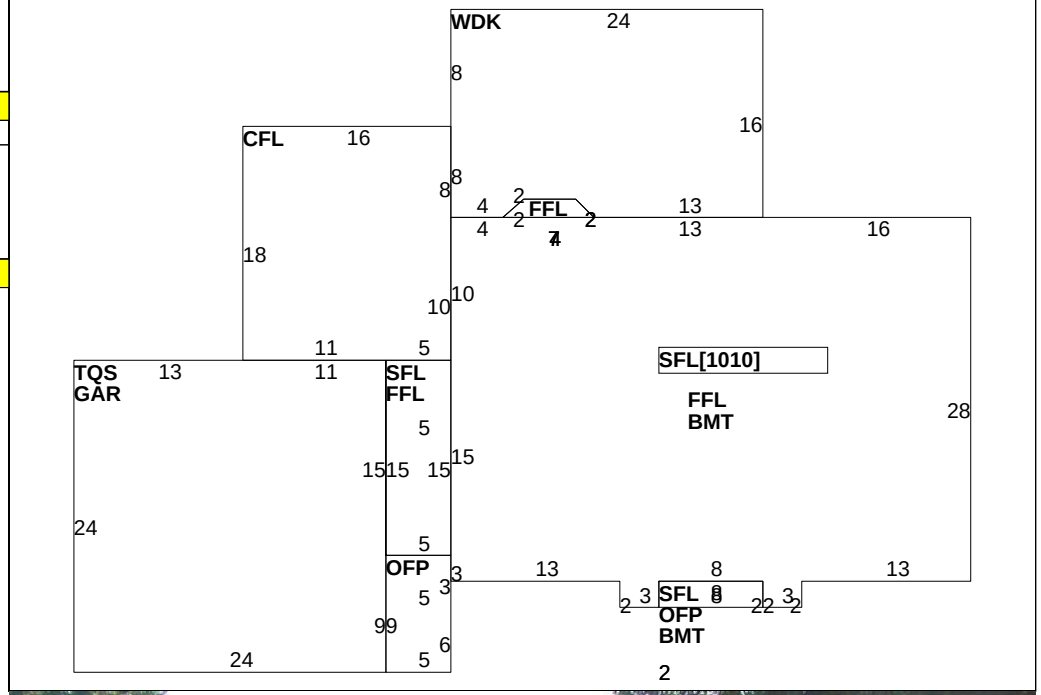

OB-OUTBUILDING & YARD ITEMS(L) / XF-BUILDING EXTRA FEATURES(B)

Code	Description	Sub	Sub Descript	L/B	Units	Unit Price	Yr	Gde	Dp Rt	Cnd	%Cnd	Apr Value
07	POOL A-C	OB	Outbuilding	L	27	69.00	2012	A		GD	70	1,300
02	SHED/FR			L	96	7.48	2012	A		GD	70	500
40	LEAN-TO			L	48	5.75	2009	A		GD	70	200
22	WOOD DK			L	320	9.20	2013	A		GD	70	2,100
02	SHED/FR			L	120	7.48	2012	A		GD	70	600
14	SCRN HSE			L	40	14.95	2012	A		GD	70	400

BUILDING SUB-AREA SUMMARY SECTION

Code	Description	Living Area	Gross Area	Eff. Area	Unit Cost	Undeprec. Value
BMT	BASEMENT	0	1,148		17.37	19,940
CFL	CATHEDRAL CE	288	288		89.41	25,749
FFL	1ST FLOOR	1,215	1,215		86.70	105,336
GAR	GARAGE	0	576		34.62	19,940
OFP	OPEN PORCH	0	61		8.53	520
SFL	2ND FLOOR	1,101	1,101		86.70	95,453
TQS	3/4 STORY	432	576		65.02	37,453
WDK	WOOD DECK	0	376		12.22	4,595
	Ttl. Gross Liv/Lease Area:	3,036	5,341	3,564		308,986