Property Location: 45 BARNUM ST | **MAP ID: 1A/ 63/ 156/ /** | **Bldg Name:** | **State Use: 101**

Vision ID: 1028 | **Account #1058** | **Bldg #: 1 of 1** | **Sec #: 1 of 1** | **Card 1 of 1** | **Print Date: 12/01/2016 09:53**

CURRENT OWNER	TOPO.	UTILITIES	STRT./ROAD	LOCATION
PAPPELARDO CORINNE M + PAUL JO		1 TYPCL		
PAPPELARDO ANNA + CHELSEA + DO				
45 BARNUM ST				
EAST LONGMEADOW, MA 01028				
Additional Owners:				

CURRENT ASSESSMENT

Description	Code	Appraised Value	Assessed Value
RESIDNTL.	101	83,700	83,700
RES LAND	101	58,200	58,200
RESIDNTL.	101	600	600
Total		142,500	142,500

1006
AST LONGMEADOW, M

VISION

SUPPLEMENTAL DATA

Other ID:	Received
SP Permit	Field 7
Chapter Land	Field 8
OC Dates	Field 9
In+Ex FY	Field 10
Mailed	
GIS ID: F_374891_2856442	ASSOC PID#

RECORD OF OWNERSHIP

	BK-VOL/PAGE	SALE DATE	q/u	v/i	SALE PRICE	V.C.
PAPPELARDO CORINNE M + PAUL JOSEPH PAPPE	16392/ 443	12/15/2006	U	I	1	A
PAPPELARDO,JOSEPH P JR	10887/ 366	08/13/1999	U	I	1	A
PAPPELARDO PAUL J,	0/63304	12/19/1986	U	I	50,000	A
PAPPELARDO	05098/ 0108	04/28/1981	U	I	0	

PREVIOUS ASSESSMENTS (HISTORY)

Yr.	Code	Assessed Value	Yr.	Code	Assessed Value	Yr.	Code	Assessed Value
2016	101	82,500	2015	101	82,500	2014	B	86,400
2016	101	62,800	2015	101	62,800	2014	L	56,700
2016	101	600	2015	101	600	2014	O	700
	Total:	145,900		Total:	145,900		Total:	143,800

EXEMPTIONS

Year	Type	Description	Amount
		Total:	

OTHER ASSESSMENTS

Code	Description	Number	Amount	Comm. Int.

This signature acknowledges a visit by a Data Collector or Assessor

APPRAISED VALUE SUMMARY

Appraised Bldg. Value (Card)	83,700
Appraised XF (B) Value (Bldg)	0
Appraised OB (L) Value (Bldg)	600
Appraised Land Value (Bldg)	58,200
Special Land Value	0
Total Appraised Parcel Value	142,500
Valuation Method:	C
Adjustment:	0
Net Total Appraised Parcel Value	**142,500**

ASSESSING NEIGHBORHOOD

NBHD/ SUB	NBHD Name	Street Index Name	Tracing	Batch
0001/A			101	MF

NOTES

FY15 CHG STY TO OLD STY FROM CONV

BUILDING PERMIT RECORD

Permit ID	Issue Date	Type	Description	Amount	Insp. Date	% Comp.	Date Comp.	Comments

VISIT/ CHANGE HISTORY

Date	Type	IS	ID	Cd.	Purpose/Result
10/14/2016			317	2	MEASURED
05/20/2004			319	2	MEASURED
05/17/2004			319	14	INSPECTED
04/20/2004			311	11	ENTRY DENIED
05/06/1992			107	22	MAILER SENT

LAND LINE VALUATION SECTION

B #	Use Code	Use Description	Zone	D	Front	Depth	Units		Unit Price	I. Factor	S.A.	Acre Disc	C. Factor	ST. Idx	Adj.	Notes- Adj	Special Pricing Spec Use	Special Pricing Spec Calc	S Adj Fact	Adj. Unit Price	Land Value
1	101	ONE FAM	BUS				5,310	SF	14.42	0.7600	3	1.0000	1.00	MF	1.00				1.00	10.96	58,200

Total Card Land Units: 0.12 AC | **Parcel Total Land Area:** 0.12 AC | **Total Land Value:** 58,200

Property Location: 45 BARNUM ST **MAP ID:** 1A/ 63/ 156/ / **Bldg Name:** **State Use:** 101

Vision ID: 1028 **Account #** 1058 **Bldg #:** 1 of 1 **Sec #:** 1 of 1 **Card** 1 of 1 **Print Date:** 12/01/2016 09:53

CONSTRUCTION DETAIL

Element	Cd.	Ch.	Description
Style	15		OLD STYLE
Model	01		RESIDENTIAL
Grade	C		AVERAGE
Stories	2.00		2 STORY
Foundation	3		MASONRY
Exterior Wall 1	5		ASBESTOS
Exterior Wall 2			
Roof Structure	1		GABLE
Roof Cover	1		ASPHALT SH
Interior Wall 1	2		PLASTER
Interior Wall 2	1		DRYWALL
Interior Floor 1	3		HARDWOOD
Interior Floor 2	4		CARPET
Heat Fuel	1		OIL
Heat Type	3		FORCED H/W
AC Type	01		NONE
Bedrooms	4		
Full Baths	2		
Half Baths	0		
Extra Fixtures	0		
Total Rooms	7		
Bath Style	A		AVERAGE
Kitchen Style	A		AVERAGE
Kitchens	1		
Extra Kitchens	0		
Frame	1		WOOD
Basement Floor	12		CONCRETE
Bsmt Garage			
Units	1		
WS Flues	1		
FBM Quality	1		
Fireplaces	0		

CONSTRUCTION DETAIL (CONTINUED)

Element	Cd.	Ch.	Description
#Heat Sys	1		
Central Vac	0		NO
FBM Sqft	256		
Int vs Ext	S		SAME

MIXED USE

Code	Description	Percentage
101	ONE FAM	100

COST/MARKET VALUATION

Adj. Base Rate:	68.68
Replace Cost	149,389
AYB	1940
EYB	1970
Dep Code	FA
Remodel Rating	
Year Remodeled	
Dep %	44
Functional Obslnc	
External Obslnc	
Cost Trend Factor	1
Condition	
% Complete	
Overall % Cond	56
Apprais Val	83,700
Dep % Ovr	0
Dep Ovr Comment	
Misc Imp Ovr	0
Misc Imp Ovr Comment	
Cost to Cure Ovr	0
Cost to Cure Ovr Comment	

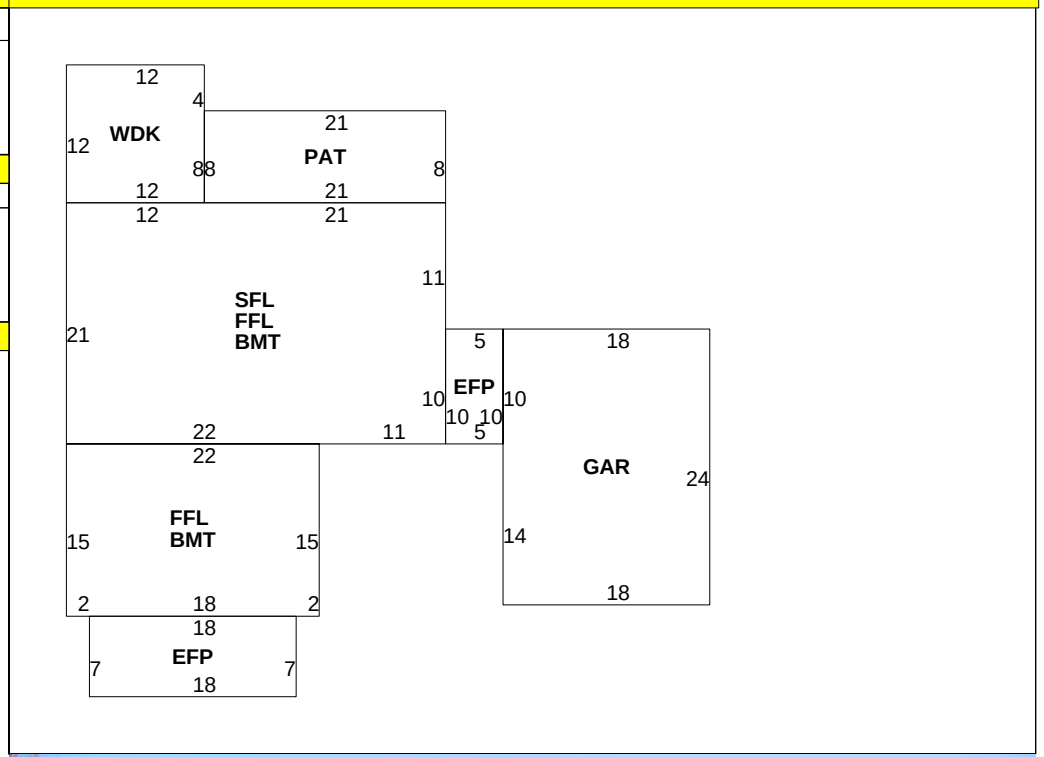

OB-OUTBUILDING & YARD ITEMS(L) / XF-BUILDING EXTRA FEATURES(B)

Code	Description	Sub	Sub Descript	L/B	Units	Unit Price	Yr	Gde	Dp Rt	Cnd	%Cnd	Apr Value
02	SHED/FR			L	140	7.48	1998	A		AV	60	600

BUILDING SUB-AREA SUMMARY SECTION

Code	Description	Living Area	Gross Area	Eff. Area	Unit Cost	Undeprec. Value
BMT	BASEMENT	0	1,023		13.76	14,080
EFP	ENCL PORCH	0	176		20.68	3,640
FFL	1ST FLOOR	1,023	1,023		68.68	70,264
GAR	GARAGE	0	432		27.51	11,882
PAT	PATIO	0	168		3.27	549
SFL	2ND FLOOR	693	693		68.68	47,598
WDK	WOOD DECK	0	144		9.54	1,374
	Ttl. Gross Liv/Lease Area:	1,716	3,659	2,175		149,389