Property Location: 64 CHESTNUT ST | **MAP ID: 40/ 52/ 0/ /** | **Bldg Name:** | **State Use: 101**

Vision ID: 3519 | **Account #3575** | **Bldg #: 1 of 1** | **Sec #: 1 of 1** | **Card 1 of 1** | **Print Date: 12/02/2016 14:25**

CURRENT OWNER	TOPO.	UTILITIES	STRT./ROAD	LOCATION
DOERSAM FREDERICK J		1 TYPCL		
DOERSAM JOANNE M				
64 CHESTNUT ST				
EAST LONGMEADOW, MA 01028				
Additional Owners:				

SUPPLEMENTAL DATA

Other ID:	Received
SP Permit	Field 7
Chapter Land	Field 8
OC Dates	Field 9
In+Ex FY	Field 10
Mailed	
GIS ID: F_383391_2846481	ASSOC PID#

CURRENT ASSESSMENT

Description	Code	Appraised Value	Assessed Value
RESIDNTL.	101	88,000	88,000
RES LAND	101	77,000	77,000
RESIDNTL.	101	3,200	3,200
Total		168,200	168,200

1006
AST LONGMEADOW, M

VISION

RECORD OF OWNERSHIP

	BK-VOL/PAGE	SALE DATE	q/u	v/i	SALE PRICE	V.C.
DOERSAM FREDERICK J	04877/ 0351	12/11/1979	U	I	0	

PREVIOUS ASSESSMENTS (HISTORY)

Yr.	Code	Assessed Value	Yr.	Code	Assessed Value	Yr.	Code	Assessed Value
2016	101	86,900	2015	101	86,900	2014	B	88,100
2016	101	74,700	2015	101	74,700	2014	L	77,100
2016	101	3,200	2015	101	3,200	2014	O	3,100
	Total:	164,800		Total:	164,800		Total:	168,300

EXEMPTIONS

Year	Type	Description	Amount
		Total:	

OTHER ASSESSMENTS

Code	Description	Number	Amount	Comm. Int.

This signature acknowledges a visit by a Data Collector or Assessor

ASSESSING NEIGHBORHOOD

NBHD/ SUB	NBHD Name	Street Index Name	Tracing	Batch
0001/A			101	MA

NOTES

APPRAISED VALUE SUMMARY

Appraised Bldg. Value (Card)	88,000
Appraised XF (B) Value (Bldg)	0
Appraised OB (L) Value (Bldg)	3,200
Appraised Land Value (Bldg)	77,000
Special Land Value	0
Total Appraised Parcel Value	168,200
Valuation Method:	C
Adjustment:	0
Net Total Appraised Parcel Value	**168,200**

BUILDING PERMIT RECORD

Permit ID	Issue Date	Type	Description	Amount	Insp. Date	% Comp.	Date Comp.	Comments
174	08/01/1991	MN	Manual Note	1,200		0		DECK
157	05/01/1988	MN	Manual Note	1,200		0		POOL A

VISIT/ CHANGE HISTORY

Date	Type	IS	ID	Cd.	Purpose/Result
11/09/2012			317	2	MEASURED
11/12/2002			250	22	MAILER SENT
11/07/2002			274	2	MEASURED
02/18/1992			170	3	MEAS+INSPCTD
11/29/1988			105	15	PERMIT VISIT

LAND LINE VALUATION SECTION

B #	Use Code	Use Description	Zone	D	Front	Depth	Units		Unit Price	I. Factor	S.A.	Acre Disc	C. Factor	ST. Idx	Adj.	Notes- Adj	Special Pricing Spec Use		Spec Calc		S Adj Fact	Adj. Unit Price	Land Value
1	101	ONE FAM	RA				24,829	SF	3.34	1.0300	5	1.0000	1.00	MA	1.00				TRF2	.90	.90	3.10	77,000

Total Card Land Units: 0.57 AC | **Parcel Total Land Area:** 0.57 AC | **Total Land Value:** 77,000

Property Location: 64 CHESTNUT ST **MAP ID:** 40/ 52/ 0/ / **Bldg Name:** **State Use:** 101

Vision ID: 3519 **Account #**3575 **Bldg #:** 1 of 1 **Sec #:** 1 of 1 **Card** 1 of 1 **Print Date:** 12/02/2016 14:25

CONSTRUCTION DETAIL

Element	Cd.	Ch.	Description
Style	15		OLD STYLE
Model	01		RESIDENTIAL
Grade	C		AVERAGE
Stories	1.75		1 3/4 STORIES
Foundation	3		MASONRY
Exterior Wall 1	3		ALUMINUM
Exterior Wall 2			
Roof Structure	1		GABLE
Roof Cover	1		ASPHALT SH
Interior Wall 1	8		PLYWD PANL
Interior Wall 2			
Interior Floor 1	3		HARDWOOD
Interior Floor 2	4		CARPET
Heat Fuel	2		GAS
Heat Type	3		FORCED H/W
AC Type	01		NONE
Bedrooms	2		
Full Baths	2		
Half Baths	1		
Extra Fixtures	0		
Total Rooms	5		
Bath Style	A		AVERAGE
Kitchen Style	A		AVERAGE
Kitchens	1		
Extra Kitchens	0		
Frame	1		WOOD
Basement Floor	12		CONCRETE
Bsmt Garage			
Units	1		
WS Flues			
FBM Quality	3		
Fireplaces	1		

CONSTRUCTION DETAIL (CONTINUED)

Element	Cd.	Ch.	Description
#Heat Sys	1		
Central Vac	0		NO
FBM Sqft	429		
Int vs Ext	S		SAME

MIXED USE

Code	Description	Percentage
101	ONE FAM	100

COST/MARKET VALUATION

Adj. Base Rate:	75.99
Replace Cost	144,223
AYB	1880
EYB	1975
Dep Code	AV
Remodel Rating	
Year Remodeled	
Dep %	39
Functional Obslnc	
External Obslnc	
Cost Trend Factor	1
Condition	
% Complete	
Overall % Cond	61
Apprais Val	88,000
Dep % Ovr	0
Dep Ovr Comment	
Misc Imp Ovr	0
Misc Imp Ovr Comment	
Cost to Cure Ovr	0
Cost to Cure Ovr Comment	

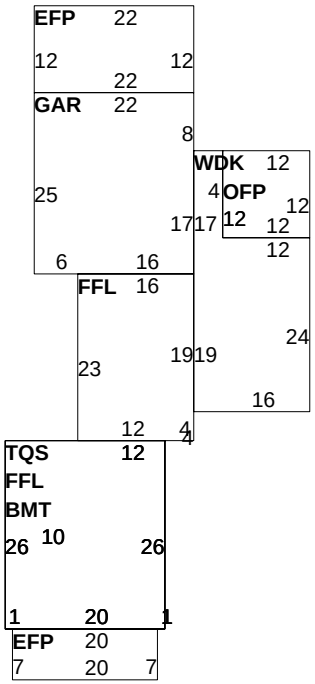

OB-OUTBUILDING & YARD ITEMS(L) / XF-BUILDING EXTRA FEATURES(B)

Code	Description	Sub	Sub Descript	L/B	Units	Unit Price	Yr	Gde	Dp Rt	Cnd	%Cnd	Apr Value
19	PATIO			L	800	5.75	1990	A		GD	70	3,200

BUILDING SUB-AREA SUMMARY SECTION

Code	Description	Living Area	Gross Area	Eff. Area	Unit Cost	Undeprec. Value
BMT	BASEMENT	0	572		15.14	8,662
EFP	ENCL PORCH	0	404		22.76	9,194
FFL	1ST FLOOR	940	940		75.99	71,428
GAR	GARAGE	0	550		30.39	16,717
OFP	OPEN PORCH	0	144		7.39	1,064
TQS	3/4 STORY	429	572		56.99	32,598
WDK	WOOD DECK	0	432		10.55	4,559
	Ttl. Gross Liv/Lease Area:	1,369	3,614	1,898		144,223