Property Location: 60 PORTER RD | **MAP ID: 48/ 28/ 78/ /** | **Bldg Name:** | **State Use: 101**

Vision ID: 3808 | **Account #3874** | **Bldg #: 1 of 1** | **Sec #: 1 of 1** | **Card 1 of 1** | **Print Date: 12/02/2016 15:33**

CURRENT OWNER	TOPO.	UTILITIES	STRT./ROAD	LOCATION
LIVINGSTONE ALTON H III		1 TYPCL		
60 PORTER RD				
EAST LONGMEADOW, MA 01028				

Additional Owners:

SUPPLEMENTAL DATA

Other ID:	Received
SP Permit	Field 7
Chapter Land	Field 8
OC Dates	Field 9
In+Ex FY	Field 10
Mailed	
GIS ID: F_385246_2853592	ASSOC PID#

CURRENT ASSESSMENT

Description	Code	Appraised Value	Assessed Value
RESIDNTL.	101	128,900	128,900
RES LAND	101	90,000	90,000
Total		218,900	218,900

1006
AST LONGMEADOW, M

VISION

RECORD OF OWNERSHIP

	BK-VOL/PAGE	SALE DATE	q/u	v/i	SALE PRICE	V.C.
FERRIGNO MICHAEL V	21373/ 536	09/26/2016	Q	I	217,000	00
LIVINGSTONE ALTON H III	20275/ 329	05/09/2014	U	I	1	1A
LIVINGSTONE ALTON H III	20206/ 462	02/28/2014	U	I	100	LE
LIVINGSTONE ALTON H JR + AGNES W LE	18016/ 188	10/05/2009	U	I	1	A
LIVINGSTONE ALTON H JR,	07277/ 243	09/27/1989	U	I	157,500	
JOHNSON-WILLIAMS MARK	05073/ 0320	02/27/1981	U	I	0	

PREVIOUS ASSESSMENTS (HISTORY)

Yr.	Code	Assessed Value	Yr.	Code	Assessed Value	Yr.	Code	Assessed Value
2016	101	127,500	2015	101	127,500	2014	B	125,700
2016	101	87,200	2015	101	87,200	2014	L	89,900
	Total:	214,700		Total:	214,700		Total:	215,600

EXEMPTIONS

Year	Type	Description	Amount
		Total:	

OTHER ASSESSMENTS

Code	Description	Number	Amount	Comm. Int.

This signature acknowledges a visit by a Data Collector or Assessor

APPRAISED VALUE SUMMARY

Appraised Bldg. Value (Card)	128,900
Appraised XF (B) Value (Bldg)	0
Appraised OB (L) Value (Bldg)	0
Appraised Land Value (Bldg)	90,000
Special Land Value	0
Total Appraised Parcel Value	218,900
Valuation Method:	C
Adjustment:	0
Net Total Appraised Parcel Value	**218,900**

ASSESSING NEIGHBORHOOD

NBHD/ SUB	NBHD Name	Street Index Name	Tracing	Batch
0001/A			101	MG

NOTES

HST HAS ROUGH FINISH ON HALF AND 30
FINISH ON REST

BUILDING PERMIT RECORD

Permit ID	Issue Date	Type	Description	Amount	Insp. Date	% Comp.	Date Comp.	Comments
100	04/29/2000	12	REROOF	6,400		0		NVC

VISIT/ CHANGE HISTORY

Date	Type	IS	ID	Cd.	Purpose/Result
11/18/2016			119	3	MEAS+INSPCTD
03/16/2010			316	3	MEAS+INSPCTD
08/20/2002			274	3	MEAS+INSPCTD
01/18/2001			247	15	PERMIT VISIT
03/02/1992			170	3	MEAS+INSPCTD

LAND LINE VALUATION SECTION

B #	Use Code	Use Description	Zone	D	Front	Depth	Units		Unit Price	I. Factor	S.A.	Acre Disc	C. Factor	ST. Idx	Adj.	Notes- Adj	Special Pricing Spec Use		Spec Calc		S Adj Fact	Adj. Unit Price	Land Value
1	101	ONE FAM	RA				20,000	SF	4.07	1.2300	7	1.0000	1.00	MG	1.00				TRF1	.90	.90	4.50	90,000

Total Card Land Units: 0.46 AC | **Parcel Total Land Area:** 0.46 AC | **Total Land Value:** 90,000

Property Location: 60 PORTER RD **MAP ID:** 48/ 28/ 78/ / **Bldg Name:** **State Use:** 101

Vision ID: 3808 **Account #**3874 **Bldg #:** 1 of 1 **Sec #:** 1 of 1 **Card** 1 of 1 **Print Date:** 12/02/2016 15:33

CONSTRUCTION DETAIL

Element	Cd.	Ch.	Description
Style	05		CAPE
Model	01		RESIDENTIAL
Grade	C+		AVG. (+)
Stories	1.50		1 1/2 STORIES
Foundation	2		CONC BLOCK
Exterior Wall 1	1		WOOD SHING
Exterior Wall 2			
Roof Structure	1		GABLE
Roof Cover	1		ASPHALT SH
Interior Wall 1	2		PLASTER
Interior Wall 2	8		PLYWD PANL
Interior Floor 1	3		HARDWOOD
Interior Floor 2			
Heat Fuel	2		GAS
Heat Type	1		FORCED H/A
AC Type	03		FULL
Bedrooms	2		
Full Baths	1		
Half Baths	0		
Extra Fixtures	0		
Total Rooms	5		
Bath Style	A		AVERAGE
Kitchen Style	A		AVERAGE
Kitchens	1		
Extra Kitchens	0		
Frame	1		WOOD
Basement Floor	12		CONCRETE
Bsmt Garage			
Units	1		
WS Flues			
FBM Quality			
Fireplaces	1		

CONSTRUCTION DETAIL (CONTINUED)

Element	Cd.	Ch.	Description
#Heat Sys	1		
Central Vac	0		NO
FBM Sqft			
Int vs Ext	S		SAME

MIXED USE

Code	Description	Percentage
101	ONE FAM	100

COST/MARKET VALUATION

Adj. Base Rate:	91.80
Replace Cost	176,627
AYB	1947
EYB	1987
Dep Code	GD
Remodel Rating	
Year Remodeled	
Dep %	27
Functional Obslnc	
External Obslnc	
Cost Trend Factor	1
Condition	
% Complete	
Overall % Cond	73
Apprais Val	128,900
Dep % Ovr	0
Dep Ovr Comment	
Misc Imp Ovr	0
Misc Imp Ovr Comment	
Cost to Cure Ovr	0
Cost to Cure Ovr Comment	

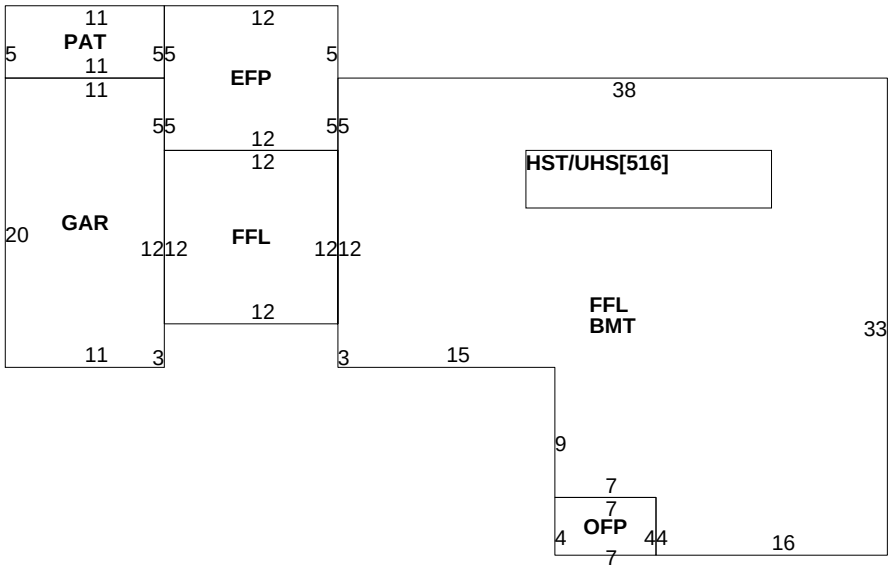

OB-OUTBUILDING & YARD ITEMS(L) / XF-BUILDING EXTRA FEATURES(B)

Code	Description	Sub	Sub Descript	L/B	Units	Unit Price	Yr	Gde	Dp Rt	Cnd	%Cnd	Apr Value

BUILDING SUB-AREA SUMMARY SECTION

Code	Description	Living Area	Gross Area	Eff. Area	Unit Cost	Undeprec. Value
BMT	BASEMENT	0	1,031		18.34	18,911
EFP	ENCL PORCH	0	120		27.54	3,305
FFL	1ST FLOOR	1,175	1,175		91.80	107,867
GAR	GARAGE	0	220		36.72	8,079
HST	HALF STORY	258	516		45.90	23,685
OFP	OPEN PORCH	0	28		9.84	275
PAT	PATIO	0	55		5.01	275
UHS	UNFIN HALF STORY	0	516		27.58	14,229
	Ttl. Gross Liv/Lease Area:	1,433	3,661	1,924		176,627