Property Location: 7 HIGHMORE CR | **MAP ID: 50/ 47/ 21R/ /** | **Bldg Name:** | **State Use: 101**

Vision ID: 4122 | **Account #4189** | **Bldg #: 1 of 1** | **Sec #: 1 of 1** | **Card 1 of 1** | **Print Date: 12/02/2016 16:46**

CURRENT OWNER	TOPO.	UTILITIES	STRT./ROAD	LOCATION
GUNN NOAH + MYLAH		1 TYPCL		
7 HIGHMORE CR				
EAST LONGMEADOW, MA 01028				

Additional Owners:

SUPPLEMENTAL DATA

Other ID:	Received
SP Permit	Field 7
Chapter Land	Field 8
OC Dates	Field 9
In+Ex FY	Field 10
Mailed	
GIS ID: F_385679_2849830	ASSOC PID#

CURRENT ASSESSMENT

Description	Code	Appraised Value	Assessed Value
RESIDNTL.	101	547,800	547,800
RES LAND	101	144,300	144,300
RESIDNTL.	101	15,400	15,400
Total		707,500	707,500

1006
AST LONGMEADOW, M

VISION

RECORD OF OWNERSHIP

	BK-VOL/PAGE	SALE DATE	q/u	v/i	SALE PRICE	V.C.
GUNN NOAH + MYLAH	20632/ 170	03/20/2015	Q	I	675,000	00
KASPER JEANNE	18108/ 225	12/03/2009	U	I	100	A
KASPER,ROBERT J	15078/ 253	06/08/2005	U	V	185,000	P
SEELEY EARLON L JR +,	06078/ 558	05/07/1986	U	V	55,000	
VERATTI	05846/ 0567	07/03/1985	U	I	34,900	

PREVIOUS ASSESSMENTS (HISTORY)

Yr.	Code	Assessed Value	Yr.	Code	Assessed Value	Yr.	Code	Assessed Value
2016	101	541,700	2015	101	497,100	2014	B	524,200
2016	101	139,900	2015	101	139,900	2014	L	146,700
2016	101	15,400	2015	101	15,400	2014	O	19,900
	Total:	697,000		Total:	652,400		Total:	690,800

EXEMPTIONS

Year	Type	Description	Amount
		Total:	

OTHER ASSESSMENTS

Code	Description	Number	Amount	Comm. Int.

This signature acknowledges a visit by a Data Collector or Assessor

ASSESSING NEIGHBORHOOD

NBHD/ SUB	NBHD Name	Street Index Name	Tracing	Batch
0001/A			101	NV

NOTES

SUB DIV 966 05 PERMIT = 80` X 60`
COLONIAL W/ ATTACHED TWO CAR GARAGE AND
DETACHED TWO CAR GARAGE.

APPRAISED VALUE SUMMARY

Appraised Bldg. Value (Card)	547,800
Appraised XF (B) Value (Bldg)	0
Appraised OB (L) Value (Bldg)	15,400
Appraised Land Value (Bldg)	144,300
Special Land Value	0
Total Appraised Parcel Value	707,500
Valuation Method:	C
Adjustment:	0
Net Total Appraised Parcel Value	**707,500**

BUILDING PERMIT RECORD

Permit ID	Issue Date	Type	Description	Amount	Insp. Date	% Comp.	Date Comp.	Comments
201502627	09/30/2015	91	INSULATION	6,567		0		
223	07/01/2005	2	DWELLING	575,000		0		SEE NOTES

VISIT/ CHANGE HISTORY

Date	Type	IS	ID	Cd.	Purpose/Result
05/22/2015			317	3	MEAS+INSPCTD
03/09/2012			317	16	FIELDREV CHG
02/22/2007			311	14	INSPECTED
01/13/2006			311	2	MEASURED
01/13/2006			311	15	PERMIT VISIT

LAND LINE VALUATION SECTION

B #	Use Code	Use Description	Zone	D	Front	Depth	Units		Unit Price	I. Factor	S.A.	Acre Disc	C. Factor	ST. Idx	Adj.	Notes- Adj	Special Pricing Spec Use	Special Pricing Spec Calc	S Adj Fact	Adj. Unit Price	Land Value
1	101	ONE FAM	RAA				40,000	SF	2.20	1.5900	9	1.0000	1.00	NV	1.00				1.00	3.50	140,000
1	101	ONE FAM	RAA				0.61	AC	7,000.00	1.0000	0	1.0000	1.00	NV	1.00				1.00	7,000.00	4,300

Total Card Land Units: 1.53 AC | Parcel Total Land Area: 1.53 AC | Total Land Value: 144,300

Property Location: 7 HIGHMORE CR **MAP ID:** 50/ 47/ 21R/ / **Bldg Name:** **State Use:** 101

Vision ID: 4122 **Account #** 4189 **Bldg #:** 1 of 1 **Sec #:** 1 of 1 **Card** 1 of 1 **Print Date:** 12/02/2016 16:46

CONSTRUCTION DETAIL

Element	Cd.	Ch.	Description
Style	06		COLONIAL
Model	01		RESIDENTIAL
Grade	A-		V GOOD-
Stories	2.00		2 STORY
Foundation	1		CONCRETE
Exterior Wall 1	7		BRICK
Exterior Wall 2	4		VINYL
Roof Structure	2		HIP
Roof Cover	1		ASPHALT SH
Interior Wall 1	1		DRYWALL
Interior Wall 2			
Interior Floor 1	3		HARDWOOD
Interior Floor 2			
Heat Fuel	2		GAS
Heat Type	1		FORCED H/A
AC Type	03		FULL
Bedrooms	5		
Full Baths	4		
Half Baths	1		
Extra Fixtures	1		
Total Rooms	11		
Bath Style	G		GOOD
Kitchen Style	G		GOOD
Kitchens	1		
Extra Kitchens	0		
Frame	1		WOOD
Basement Floor	12		CONCRETE
Bsmt Garage			
Units	1		
WS Flues			
FBM Quality	1		
Fireplaces	1		

CONSTRUCTION DETAIL (CONTINUED)

Element	Cd.	Ch.	Description
#Heat Sys	2		
Central Vac	0		NO
FBM Sqft	379		
Int vs Ext	S		SAME

MIXED USE

Code	Description	Percentage
101	ONE FAM	100

COST/MARKET VALUATION

Adj. Base Rate:	98.62
Replace Cost	576,649
AYB	2005
EYB	2009
Dep Code	GD
Remodel Rating	
Year Remodeled	
Dep %	5
Functional Obslnc	
External Obslnc	
Cost Trend Factor	1
Condition	
% Complete	
Overall % Cond	95
Apprais Val	547,800
Dep % Ovr	0
Dep Ovr Comment	
Misc Imp Ovr	0
Misc Imp Ovr Comment	
Cost to Cure Ovr	0
Cost to Cure Ovr Comment	

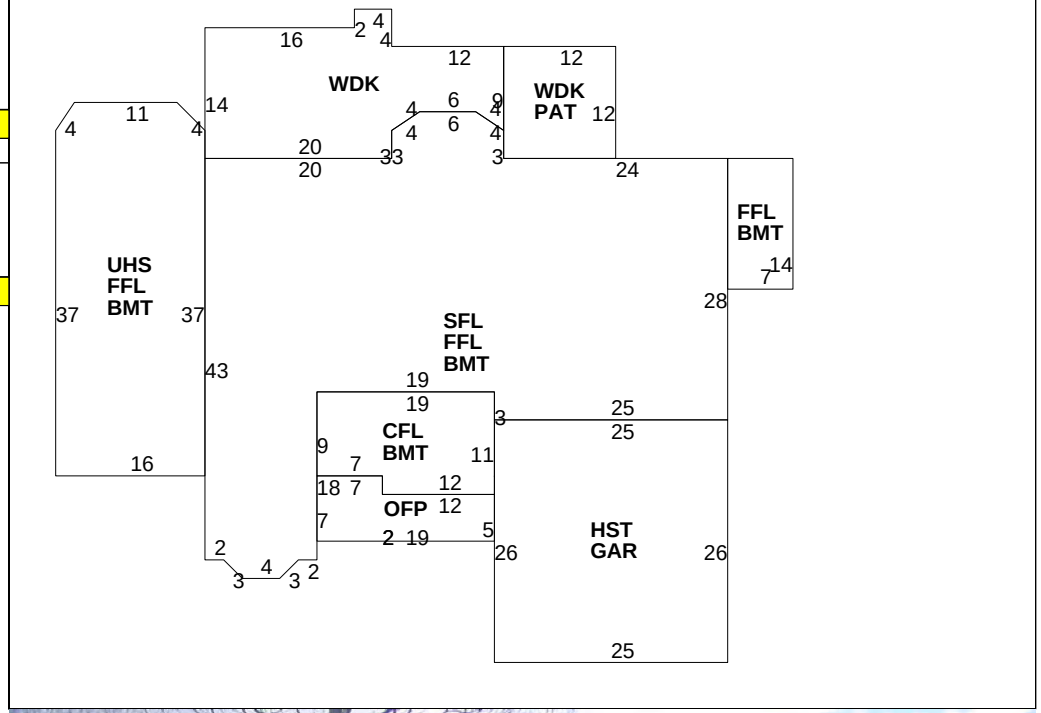

OB-OUTBUILDING & YARD ITEMS(L) / XF-BUILDING EXTRA FEATURES(B)

Code	Description	Sub	Sub Descript	L/B	Units	Unit Price	Yr	Gde	Dp Rt	Cnd	%Cnd	Apr Value
04	GARAGE/L			L	576	30.48	2005	G		GD	70	15,400
GEN	GENERATOR			B	1	0.00	2009	A	1		100	0

BUILDING SUB-AREA SUMMARY SECTION

Code	Description	Living Area	Gross Area	Eff. Area	Unit Cost	Undeprec. Value
BMT	BASEMENT	0	2,682		19.71	52,862
CFL	CATHEDRAL CE	195	195		101.66	19,823
FFL	1ST FLOOR	2,487	2,487		98.62	245,276
GAR	GARAGE	0	650		39.45	25,642
HST	HALF STORY	325	650		49.31	32,053
OFP	OPEN PORCH	0	109		9.95	1,085
PAT	PATIO	0	144		4.79	690
SFL	2ND FLOOR	1,757	1,757		98.62	173,281
UHS	UNFIN HALF STORY	0	632		29.65	18,738
WDK	WOOD DECK	0	522		13.79	7,199
	Ttl. Gross Liv/Lease Area:	4,764	9,828	5,847		576,649