Property Location: 5 FAVORITE LN | **MAP ID: 55/ 5A/ 24/ /** | **Bldg Name:** | **State Use: 101**

Vision ID: 4306 | **Account #4375** | **Bldg #: 1 of 1** | **Sec #: 1 of 1** | **Card 1 of 1** | **Print Date: 12/02/2016 17:30**

CURRENT OWNER	TOPO.	UTILITIES	STRT./ROAD	LOCATION
PETIT JARED D + SHANA A		1 TYPCL		
5 FAVORITE LN				
EAST LONGMEADOW, MA 01028				
Additional Owners:				

SUPPLEMENTAL DATA

Other ID:	Received
SP Permit	Field 7
Chapter Land	Field 8
OC Dates	Field 9
In+Ex FY	Field 10
Mailed	
GIS ID: F_386613_2842614	ASSOC PID#

CURRENT ASSESSMENT

Description	Code	Appraised Value	Assessed Value
RESIDNTL.	101	413,600	413,600
RES LAND	101	141,700	141,700
Total		555,300	555,300

1006
AST LONGMEADOW, M

VISION

RECORD OF OWNERSHIP

	BK-VOL/PAGE	SALE DATE	q/u	v/i	SALE PRICE	V.C.
PETIT JARED D + SHANA A	20875/ 96	09/17/2015	Q	I	488,000	00
JACKSON PHILIP C	15815/ 515	04/05/2006	U	I	687,500	
KANE,MICHAEL	14090/ 317	04/08/2004	U	I	1	B
FAVORITA REALTY ILLC,	11647/ 381	05/18/2001	U	I	170,000	
GOLDSTEIN KENNETH A,	8046/ 7	05/13/1992	U	I	1	A
GOLDSTEIN MARIE L	2520/ 310	01/10/1957	U	I	0	

PREVIOUS ASSESSMENTS (HISTORY)

Yr.	Code	Assessed Value	Yr.	Code	Assessed Value	Yr.	Code	Assessed Value
2016	101	409,100	2015	101	476,100	2014	B	457,000
2016	101	137,700	2015	101	161,300	2014	L	170,100
	Total:	546,800		Total:	637,400		Total:	627,100

EXEMPTIONS

Year	Type	Description	Amount
		Total:	

OTHER ASSESSMENTS

Code	Description	Number	Amount	Comm. Int.

This signature acknowledges a visit by a Data Collector or Assessor

APPRAISED VALUE SUMMARY

Appraised Bldg. Value (Card)	413,600
Appraised XF (B) Value (Bldg)	0
Appraised OB (L) Value (Bldg)	0
Appraised Land Value (Bldg)	141,700
Special Land Value	0
Total Appraised Parcel Value	555,300
Valuation Method:	C
Adjustment:	0
Net Total Appraised Parcel Value	**555,300**

ASSESSING NEIGHBORHOOD

NBHD/ SUB	NBHD Name	Street Index Name	Tracing	Batch
0001/A			101	NS

NOTES

SUB DIV #792 SUB DIV 867 & 877 -SUB DIV
996
EST REAR OF HOUSE FENCED YD
MLS 71593700 APPRAISER LIV AREA 4850

BUILDING PERMIT RECORD

Permit ID	Issue Date	Type	Description	Amount	Insp. Date	% Comp.	Date Comp.	Comments
299	09/24/2007	37	3 SEASON RM	60,000		0		16` X 8` W/DECK
402	12/06/2006	9	ALTERATION	2,000		0		AWNING OVER SOUTH
180	07/09/2004	2	DWELLING	300,000		0		OC 03/17/2006
119	05/24/2004	5	DEMOLITION	8,000		0		
329	11/01/1993	MN	Manual Note	5,000		0		ALTERATION

VISIT/ CHANGE HISTORY

Date	Type	IS	ID	Cd.	Purpose/Result
07/27/2015			400	16	FIELDREV CHG
12/06/2013			317	14	INSPECTED
11/15/2013			317	2	MEASURED
02/29/2008			317	15	PERMIT VISIT
02/23/2007			311	15	PERMIT VISIT

LAND LINE VALUATION SECTION

B #	Use Code	Use Description	Zone	D	Front	Depth	Units		Unit Price	I. Factor	S.A.	Acre Disc	C. Factor	ST. Idx	Adj.	Notes- Adj	Special Pricing Spec Use		Spec Calc		S Adj Fact	Adj. Unit Price	Land Value
1	101	ONE FAM	RAA				40,025	SF	2.20	1.8800	2	1.0000	0.95	NS	1.00	WET			TRF2	.90	.90	3.54	141,700

Total Card Land Units: 0.92 AC | Parcel Total Land Area: 0.92 AC | Total Land Value: 141,700

Property Location: 5 FAVORITE LN **MAP ID:** 55/ 5A/ 24/ / **Bldg Name:** **State Use:** 101

Vision ID: 4306 **Account #**4375 **Bldg #:** 1 of 1 **Sec #:** 1 of 1 **Card** 1 of 1 **Print Date:** 12/02/2016 17:30

CONSTRUCTION DETAIL

Element	Cd.	Ch.	Description
Style	05		CAPE
Model	01		RESIDENTIAL
Grade	B-		GOOD (-)
Stories	1.75		1 3/4 STORIES
Foundation	1		CONCRETE
Exterior Wall 1	4		VINYL
Exterior Wall 2	8		BRICK VENR
Roof Structure	1		GABLE
Roof Cover	1		ASPHALT SH
Interior Wall 1	1		DRYWALL
Interior Wall 2			
Interior Floor 1	3		HARDWOOD
Interior Floor 2	4		CARPET
Heat Fuel	2		GAS
Heat Type	1		FORCED H/A
AC Type	03		FULL
Bedrooms	5		
Full Baths	4		
Half Baths	1		
Extra Fixtures	4		
Total Rooms	9		
Bath Style	G		GOOD
Kitchen Style	G		GOOD
Kitchens	1		
Extra Kitchens	0		
Frame	1		WOOD
Basement Floor	12		CONCRETE
Bsmt Garage			
Units	1		
WS Flues			
FBM Quality			
Fireplaces	2		

CONSTRUCTION DETAIL (CONTINUED)

Element	Cd.	Ch.	Description
#Heat Sys	2		
Central Vac	1		YES
FBM Sqft			
Int vs Ext	S		SAME

MIXED USE

Code	Description	Percentage
101	ONE FAM	100

COST/MARKET VALUATION

Adj. Base Rate:	82.00
Replace Cost	435,358
AYB	2004
EYB	2009
Dep Code	GD
Remodel Rating	
Year Remodeled	
Dep %	5
Functional Obslnc	
External Obslnc	
Cost Trend Factor	1
Condition	
% Complete	
Overall % Cond	95
Apprais Val	413,600
Dep % Ovr	0
Dep Ovr Comment	
Misc Imp Ovr	0
Misc Imp Ovr Comment	
Cost to Cure Ovr	0
Cost to Cure Ovr Comment	

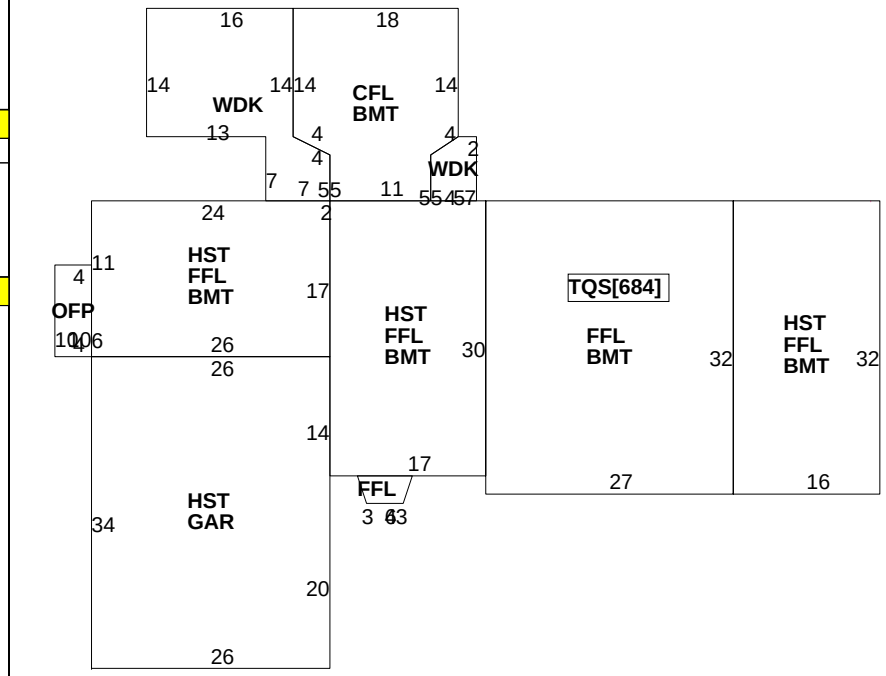

OB-OUTBUILDING & YARD ITEMS(L) / XF-BUILDING EXTRA FEATURES(B)

Code	Description	Sub	Sub Descript	L/B	Units	Unit Price	Yr	Gde	Dp Rt	Cnd	%Cnd	Apr Value
GEN	GENERATOR			B	1	0.00	2009	A	1		100	0

BUILDING SUB-AREA SUMMARY SECTION

Code	Description	Living Area	Gross Area	Eff. Area	Unit Cost	Undeprec. Value
BMT	BASEMENT	0	2,664		16.41	43,708
CFL	CATHEDRAL CE	336	336		84.44	28,373
FFL	1ST FLOOR	2,343	2,343		82.00	192,135
GAR	GARAGE	0	884		32.84	29,029
HST	HALF STORY	1,174	2,348		41.00	96,272
OFP	OPEN PORCH	0	40		8.20	328
TQS	3/4 STORY	513	684		61.50	42,068
WDK	WOOD DECK	0	301		11.44	3,444
	Ttl. Gross Liv/Lease Area:	4,366	9,600	5,309		435,358