Property Location: 58 BAYMOR DR | **MAP ID: 15/ 64/ 23/ /** | **Bldg Name:** | **State Use: 101**

Vision ID: 441 | **Account #450** | **Bldg #: 1 of 1** | **Sec #: 1 of 1** | **Card 1 of 1** | **Print Date: 11/30/2016 15:40**

CURRENT OWNER	TOPO.	UTILITIES	STRT./ROAD	LOCATION
MIORANDI FRANKLIN J		1 TYPCL		
MIORANDI GAIL F				
58 BAYMOR DRIVE				
EAST LONGMEADOW, MA 01028				
Additional Owners:				

CURRENT ASSESSMENT

Description	Code	Appraised Value	Assessed Value
RESIDNTL.	101	120,600	120,600
RES LAND	101	80,500	80,500
RESIDNTL.	101	900	900
	Total	202,000	202,000

1006
EAST LONGMEADOW, M

VISION

SUPPLEMENTAL DATA

Other ID:	Received
SP Permit	Field 7
Chapter Land	Field 8
OC Dates	Field 9
In+Ex FY	Field 10
Mailed	
GIS ID: F_378223_2850931	ASSOC PID#

RECORD OF OWNERSHIP

	BK-VOL/PAGE	SALE DATE	q/u	v/i	SALE PRICE	V.C.
MIORANDI FRANKLIN J	06503/ 228	05/29/1987	U	I	119,900	
CASEY	04525/ 0308	12/09/1977	U	I	0	

PREVIOUS ASSESSMENTS (HISTORY)

Yr.	Code	Assessed Value	Yr.	Code	Assessed Value	Yr.	Code	Assessed Value
2016	101	119,200	2015	101	119,200	2014	B	117,000
2016	101	78,200	2015	101	78,200	2014	L	80,700
2016	101	900	2015	101	900	2014	O	1,000
	Total:	198,300		Total:	198,300		Total:	198,700

EXEMPTIONS

Year	Type	Description	Amount
		Total:	

OTHER ASSESSMENTS

Code	Description	Number	Amount	Comm. Int.

This signature acknowledges a visit by a Data Collector or Assessor

APPRAISED VALUE SUMMARY

Appraised Bldg. Value (Card)	120,600
Appraised XF (B) Value (Bldg)	0
Appraised OB (L) Value (Bldg)	900
Appraised Land Value (Bldg)	80,500
Special Land Value	0
Total Appraised Parcel Value	202,000
Valuation Method:	C
Adjustment:	0
Net Total Appraised Parcel Value	**202,000**

ASSESSING NEIGHBORHOOD

NBHD/ SUB	NBHD Name	Street Index Name	Tracing	Batch
0001/A			101	MA

NOTES

1ST FL HAS DOUBLE SHOWER ENCLOSURE.

BUILDING PERMIT RECORD

Permit ID	Issue Date	Type	Description	Amount	Insp. Date	% Comp.	Date Comp.	Comments
203	06/08/2006	12	REROOF	4,600		0		NVC
176	08/01/1991	MN	Manual Note	21,000		0		ADDITION
198	07/01/1987	MN	Manual Note	3,700		0		DORMER
16	01/01/1984	MN	Manual Note	0		0		WOOD STOVE

VISIT/ CHANGE HISTORY

Date	Type	IS	ID	Cd.	Purpose/Result
12/21/2006			311	15	PERMIT VISIT
12/21/2006			311	15	PERMIT VISIT
05/01/2004			319	14	INSPECTED
04/02/2004			250	22	MAILER SENT
03/10/2004			311	2	MEASURED

LAND LINE VALUATION SECTION

B #	Use Code	Use Description	Zone	D	Front	Depth	Units		Unit Price	I. Factor	S.A.	Acre Disc	C. Factor	ST. Idx	Adj.	Notes- Adj	Special Pricing Spec Use	Special Pricing Spec Calc	S Adj Fact	Adj. Unit Price	Land Value
1	101	ONE FAM	RC				10,484	SF	7.46	1.0300	5	1.0000	1.00	MA	1.00				1.00	7.68	80,500

Total Card Land Units: 0.24 AC | Parcel Total Land Area: 0.24 AC | Total Land Value: 80,500

Property Location: 58 BAYMOR DR **MAP ID:** 15/ 64/ 23/ / **Bldg Name:** **State Use:** 101

Vision ID: 441 **Account #** 450 **Bldg #:** 1 of 1 **Sec #:** 1 of 1 **Card** 1 of 1 **Print Date:** 11/30/2016 15:40

CONSTRUCTION DETAIL

Element	Cd.	Ch.	Description
Style	05		CAPE
Model	01		RESIDENTIAL
Grade	C		AVERAGE
Stories	1.75		1 3/4 STORIES
Foundation	2		CONC BLOCK
Exterior Wall 1	1		WOOD SHING
Exterior Wall 2			
Roof Structure	1		GABLE
Roof Cover	1		ASPHALT SH
Interior Wall 1	2		PLASTER
Interior Wall 2			
Interior Floor 1	3		HARDWOOD
Interior Floor 2			
Heat Fuel	2		GAS
Heat Type	1		FORCED H/A
AC Type	01		NONE
Bedrooms	4		
Full Baths	2		
Half Baths	0		
Extra Fixtures	0		
Total Rooms	8		
Bath Style	A		AVERAGE
Kitchen Style	A		AVERAGE
Kitchens	1		
Extra Kitchens	0		
Frame	1		WOOD
Basement Floor			
Bsmt Garage			
Units	1		
WS Flues			
FBM Quality			
Fireplaces	1		

CONSTRUCTION DETAIL (CONTINUED)

Element	Cd.	Ch.	Description
#Heat Sys	1		
Central Vac	0		NO
FBM Sqft			
Int vs Ext	S		SAME

MIXED USE

Code	Description	Percentage
101	ONE FAM	100

COST/MARKET VALUATION

Adj. Base Rate:	79.37
Replace Cost	197,630
AYB	1958
EYB	1975
Dep Code	AV
Remodel Rating	
Year Remodeled	
Dep %	39
Functional Obslnc	
External Obslnc	
Cost Trend Factor	1
Condition	
% Complete	
Overall % Cond	61
Apprais Val	120,600
Dep % Ovr	0
Dep Ovr Comment	
Misc Imp Ovr	0
Misc Imp Ovr Comment	
Cost to Cure Ovr	0
Cost to Cure Ovr Comment	

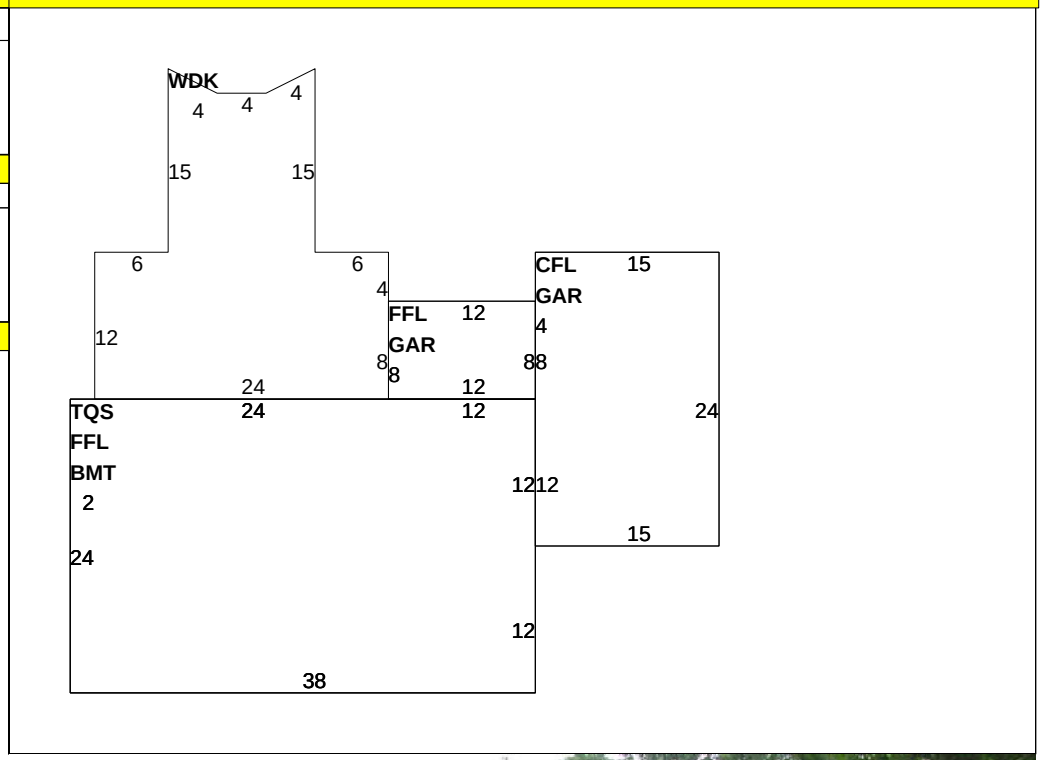

OB-OUTBUILDING & YARD ITEMS(L) / XF-BUILDING EXTRA FEATURES(B)

Code	Description	Sub	Sub Descript	L/B	Units	Unit Price	Yr	Gde	Dp Rt	Cnd	%Cnd	Apr Value
07	POOL A-C	OB	Outbuilding	L	21	69.00	1990	A		AV	60	900

BUILDING SUB-AREA SUMMARY SECTION

Code	Description	Living Area	Gross Area	Eff. Area	Unit Cost	Undeprec. Value
BMT	BASEMENT	0	912		15.84	14,445
CFL	CATHEDRAL CE	360	360		81.79	29,446
FFL	1ST FLOOR	1,008	1,008		79.37	80,004
GAR	GARAGE	0	456		31.68	14,445
TQS	3/4 STORY	684	912		59.53	54,289
WDK	WOOD DECK	0	452		11.06	5,000
	Ttl. Gross Liv/Lease Area:	2,052	4,100	2,490		197,630