Property Location: 294 MAPLE ST | **MAP ID: 6/ 117/ 0/ /** | **Bldg Name:** | **State Use: 101**

Vision ID: 4525 | **Account #4598** | **Bldg #: 1 of 1** | **Sec #: 1 of 1** | **Card 1 of 1** | **Print Date: 12/02/2016 18:23**

CURRENT OWNER	TOPO.	UTILITIES	STRT./ROAD	LOCATION
LESURE GAYLE E		1 TYPCL		
294 MAPLE ST				
EAST LONGMEADOW, MA 01028				

Additional Owners:

SUPPLEMENTAL DATA

Other ID:	Received
SP Permit	Field 7
Chapter Land	Field 8
OC Dates	Field 9
In+Ex FY	Field 10
Mailed	
GIS ID: F_375717_2848093	ASSOC PID#

CURRENT ASSESSMENT

Description	Code	Appraised Value	Assessed Value
RESIDNTL.	101	77,800	77,800
RES LAND	101	82,700	82,700
RESIDNTL.	101	800	800
Total		161,300	161,300

1006
EAST LONGMEADOW, M

VISION

RECORD OF OWNERSHIP

	BK-VOL/PAGE	SALE DATE	q/u	v/i	SALE PRICE	V.C.
LESURE GAYLE E	08782/ 0166	03/25/1994	U	I	1	A
LESURE HELEN E	01956/ 0500	09/02/1948	U	I	0	

PREVIOUS ASSESSMENTS (HISTORY)

Yr.	Code	Assessed Value	Yr.	Code	Assessed Value	Yr.	Code	Assessed Value
2016	101	100,200	2015	101	100,200	2014	B	94,700
2016	101	80,300	2015	101	80,300	2014	L	82,800
2016	101	1,200	2015	101	1,200	2014	O	900
	Total:	181,700		Total:	181,700		Total:	178,400

EXEMPTIONS

Year	Type	Description	Amount
		Total:	

OTHER ASSESSMENTS

Code	Description	Number	Amount	Comm. Int.

This signature acknowledges a visit by a Data Collector or Assessor

APPRAISED VALUE SUMMARY

Appraised Bldg. Value (Card)	77,800
Appraised XF (B) Value (Bldg)	0
Appraised OB (L) Value (Bldg)	800
Appraised Land Value (Bldg)	82,700
Special Land Value	0
Total Appraised Parcel Value	161,300
Valuation Method:	C
Adjustment:	0
Net Total Appraised Parcel Value	**161,300**

ASSESSING NEIGHBORHOOD

NBHD/ SUB	NBHD Name	Street Index Name	Tracing	Batch
0001/A			101	MA

NOTES

SOLAR PANELS USED FOR H/W

BUILDING PERMIT RECORD

Permit ID	Issue Date	Type	Description	Amount	Insp. Date	% Comp.	Date Comp.	Comments

VISIT/ CHANGE HISTORY

Date	Type	IS	ID	Cd.	Purpose/Result
01/29/2016			105	14	INSPECTED
01/22/2016			105	2	MEASURED
05/04/2004			318	14	INSPECTED
04/05/2004			250	22	MAILER SENT
03/26/2004			317	2	MEASURED

LAND LINE VALUATION SECTION

B #	Use Code	Use Description	Zone	D	Front	Depth	Units		Unit Price	I. Factor	S.A.	Acre Disc	C. Factor	ST. Idx	Adj.	Notes- Adj	Special Pricing Spec Use		Spec Calc		S Adj Fact	Adj. Unit Price	Land Value
1	101	ONE FAM	RB				40,000	SF	2.20	1.0300	5	1.0000	1.00	MA	1.00				TRF2	.90	.90	2.04	81,600
1	101	ONE FAM	RB				0.16	AC	7,000.00	1.0000	0	1.0000	1.00	MA	1.00						1.00	7,000.00	1,100

Total Card Land Units: 1.08 AC | Parcel Total Land Area: 1.08 AC | Total Land Value: 82,700

Property Location: 294 MAPLE ST **MAP ID:** 6/ 117/ 0/ / **Bldg Name:** **State Use:** 101

Vision ID: 4525 **Account #** 4598 **Bldg #:** 1 of 1 **Sec #:** 1 of 1 **Card** 1 of 1 **Print Date:** 12/02/2016 18:23

CONSTRUCTION DETAIL

Element	Cd.	Ch.	Description
Style	05		CAPE
Model	01		RESIDENTIAL
Grade	C		AVERAGE
Stories	1.50		1 1/2 STORIES
Foundation	1		CONCRETE
Exterior Wall 1	4		VINYL
Exterior Wall 2	9		STONE
Roof Structure	1		GABLE
Roof Cover	1		ASPHALT SH
Interior Wall 1	2		PLASTER
Interior Wall 2			
Interior Floor 1	4		CARPET
Interior Floor 2	3		HARDWOOD
Heat Fuel	1		OIL
Heat Type	5		STEAM
AC Type	01		NONE
Bedrooms	2		
Full Baths	1		
Half Baths	0		
Extra Fixtures	0		
Total Rooms	5		
Bath Style	A		AVERAGE
Kitchen Style	A		AVERAGE
Kitchens	1		
Extra Kitchens	0		
Frame	1		WOOD
Basement Floor	12		CONCRETE
Bsmt Garage			
Units	1		
WS Flues			
FBM Quality			
Fireplaces			

CONSTRUCTION DETAIL (CONTINUED)

Element	Cd.	Ch.	Description
#Heat Sys	1		
Central Vac	0		NO
FBM Sqft			
Int vs Ext	S		SAME

MIXED USE

Code	Description	Percentage
101	ONE FAM	100

COST/MARKET VALUATION

Adj. Base Rate:	79.11
Replace Cost	162,014
AYB	1950
EYB	1962
Dep Code	FR
Remodel Rating	
Year Remodeled	
Dep %	52
Functional Obslnc	
External Obslnc	
Cost Trend Factor	1
Condition	
% Complete	
Overall % Cond	48
Apprais Val	77,800
Dep % Ovr	0
Dep Ovr Comment	
Misc Imp Ovr	0
Misc Imp Ovr Comment	
Cost to Cure Ovr	0
Cost to Cure Ovr Comment	

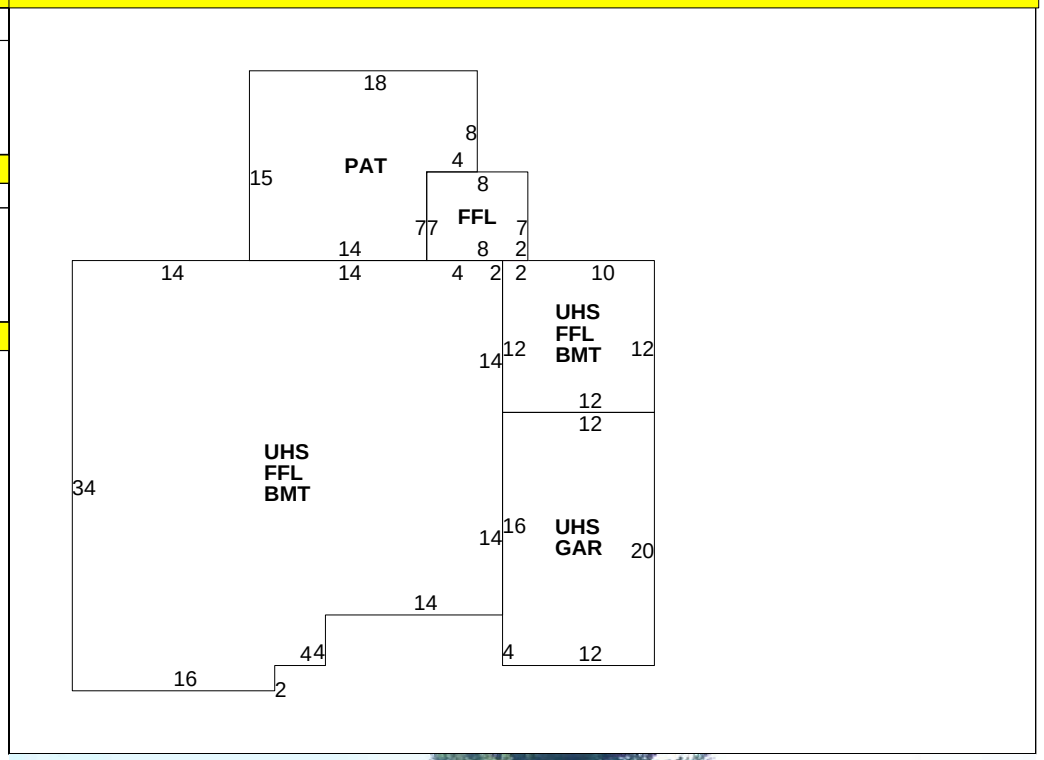

OB-OUTBUILDING & YARD ITEMS(L) / XF-BUILDING EXTRA FEATURES(B)

Code	Description	Sub	Sub Descript	L/B	Units	Unit Price	Yr	Gde	Dp Rt	Cnd	%Cnd	Apr Value
02	SHED/FR			L	168	7.48	1970	A		AV	60	800
SHW	Solar Hot Water			B	1	1.00	1962	A	1	AV	0	0

BUILDING SUB-AREA SUMMARY SECTION

Code	Description	Living Area	Gross Area	Eff. Area	Unit Cost	Undeprec. Value
BMT	BASEMENT	0	1,208		15.85	19,144
FFL	1ST FLOOR	1,264	1,264		79.11	99,993
GAR	GARAGE	0	240		31.64	7,594
PAT	PATIO	0	242		3.92	949
UHS	UNFIN HALF STORY	0	1,448		23.71	34,333
	Ttl. Gross Liv/Lease Area:	1,264	4,402	2,048		162,014