Property Location: 459 PARKER ST | **MAP ID: 61/ 63/ B/ /** | **Bldg Name:** | **State Use: 101**

Vision ID: 4760 | **Account #4833** | **Bldg #: 1 of 1** | **Sec #: 1 of 1** | **Card 1 of 1** | **Print Date: 12/06/2016 09:08**

CURRENT OWNER	TOPO.	UTILITIES	STRT./ROAD	LOCATION
PENNIMAN STEVEN J		1 TYPCL		
PENNIMAN CATHERINE M				
459 PARKER ST				
EAST LONGMEADOW, MA 01028				
Additional Owners:				

SUPPLEMENTAL DATA

Other ID:	Received
SP Permit	Field 7
Chapter Land	Field 8
OC Dates	Field 9
In+Ex FY	Field 10
Mailed	
GIS ID: F_389206_2851894	ASSOC PID#

CURRENT ASSESSMENT

Description	Code	Appraised Value	Assessed Value
RESIDNTL.	101	119,600	119,600
RES LAND	101	92,000	92,000
RESIDNTL.	101	13,800	18,800
Total		225,400	230,400

1006
AST LONGMEADOW, M

VISION

RECORD OF OWNERSHIP

	BK-VOL/PAGE	SALE DATE	q/u	v/i	SALE PRICE	V.C.
PENNIMAN STEVEN J	12502/ 408	08/14/2002	U	I	10	A
PENNIMAN STEVEN J,	06122/ 138	06/18/1986	U	I	73,000	
BOUCHARD	04292/ 0396	07/14/1976	U	I	0	

PREVIOUS ASSESSMENTS (HISTORY)

Yr.	Code	Assessed Value	Yr.	Code	Assessed Value	Yr.	Code	Assessed Value
2016	101	110,700	2015	101	52,600	2014	B	71,900
2016	101	89,000	2015	101	89,000	2014	L	91,800
2016	101	18,800	2015	101	18,800	2014	O	18,900
	Total:	218,500		Total:	160,400		Total:	182,600

EXEMPTIONS

Year	Type	Description	Amount
		Total:	

OTHER ASSESSMENTS

Code	Description	Number	Amount	Comm. Int.

This signature acknowledges a visit by a Data Collector or Assessor

ASSESSING NEIGHBORHOOD

NBHD/ SUB	NBHD Name	Street Index Name	Tracing	Batch
0001/A			101	MG

NOTES

NC=95% COMPLETE

RECK 6/17

APPRAISED VALUE SUMMARY

Appraised Bldg. Value (Card)	119,600
Appraised XF (B) Value (Bldg)	0
Appraised OB (L) Value (Bldg)	13,800
Appraised Land Value (Bldg)	92,000
Special Land Value	0
Total Appraised Parcel Value	225,400
Valuation Method:	C
Adjustment:	0
Net Total Appraised Parcel Value	**225,400**

BUILDING PERMIT RECORD

Permit ID	Issue Date	Type	Description	Amount	Insp. Date	% Comp.	Date Comp.	Comments
201602036	07/07/2016	4	ADDITION	10,000		0		(SPECIAL PERMIT) AD
252	08/24/2011	41	FOUNDATION	10,000	04/17/2015	100	04/17/2015	UNDER EXISTING ENC
313	09/11/2006	8	RENOVATION	5,000		0		NEW CHIMNEY, MAIN
291	10/01/1994	MN	Manual Note	1,000		0		FONDATION
211	08/01/1989	MN	Manual Note	2,200		0		ADDITION

VISIT/ CHANGE HISTORY

Date	Type	IS	ID	Cd.	Purpose/Result
04/08/2016			317	15	PERMIT VISIT
04/17/2015			105	15	PERMIT VISIT
04/04/2014			317	15	PERMIT VISIT
05/31/2013			317	15	PERMIT VISIT
04/20/2012			317	15	PERMIT VISIT

LAND LINE VALUATION SECTION

B #	Use Code	Use Description	Zone	D	Front	Depth	Units		Unit Price	I. Factor	S.A.	Acre Disc	C. Factor	ST. Idx	Adj.	Notes- Adj	Special Pricing Spec Use		Spec Calc		S Adj Fact	Adj. Unit Price	Land Value
1	101	ONE FAM	RA				25,200	SF	3.30	1.2300	7	1.0000	1.00	MG	1.00				TRF1	.90	.90	3.65	92,000

Total Card Land Units: 0.58 AC | Parcel Total Land Area: 0.58 AC | Total Land Value: 92,000

Property Location: 459 PARKER ST **MAP ID:** 61/ 63/ B/ / **Bldg Name:** **State Use:** 101

Vision ID: 4760 **Account #** 4833 **Bldg #:** 1 of 1 **Sec #:** 1 of 1 **Card** 1 of 1 **Print Date:** 12/06/2016 09:08

CONSTRUCTION DETAIL

Element	Cd.	Ch.	Description
Style	15		OLD STYLE
Model	01		RESIDENTIAL
Grade	C		AVERAGE
Stories	2.00		2 STORY
Foundation	3		MASONRY
Exterior Wall 1	2		CLAPBOARD
Exterior Wall 2			
Roof Structure	1		GABLE
Roof Cover	1		ASPHALT SH
Interior Wall 1	2		PLASTER
Interior Wall 2			
Interior Floor 1	4		CARPET
Interior Floor 2	2		SOFTWOOD
Heat Fuel	1		OIL
Heat Type	5		STEAM
AC Type	01		NONE
Bedrooms	3		
Full Baths	1		
Half Baths	1		
Extra Fixtures	0		
Total Rooms	5		
Bath Style	G		GOOD
Kitchen Style	G		GOOD
Kitchens	1		
Extra Kitchens	0		
Frame	1		WOOD
Basement Floor	12		CONCRETE
Bsmt Garage			
Units	1		
WS Flues	1		
FBM Quality			
Fireplaces	0		

CONSTRUCTION DETAIL (CONTINUED)

Element	Cd.	Ch.	Description
#Heat Sys	1		
Central Vac	0		NO
FBM Sqft			
Int vs Ext	S		SAME

MIXED USE

Code	Description	Percentage
101	ONE FAM	100

COST/MARKET VALUATION

Adj. Base Rate:	68.93
Replace Cost	147,658
AYB	1880
EYB	2000
Dep Code	GD
Remodel Rating	
Year Remodeled	
Dep %	14
Functional Obslnc	
External Obslnc	
Cost Trend Factor	1
Condition	NC
% Complete	81
Overall % Cond	81
Apprais Val	119,600
Dep % Ovr	0
Dep Ovr Comment	
Misc Imp Ovr	0
Misc Imp Ovr Comment	
Cost to Cure Ovr	0
Cost to Cure Ovr Comment	

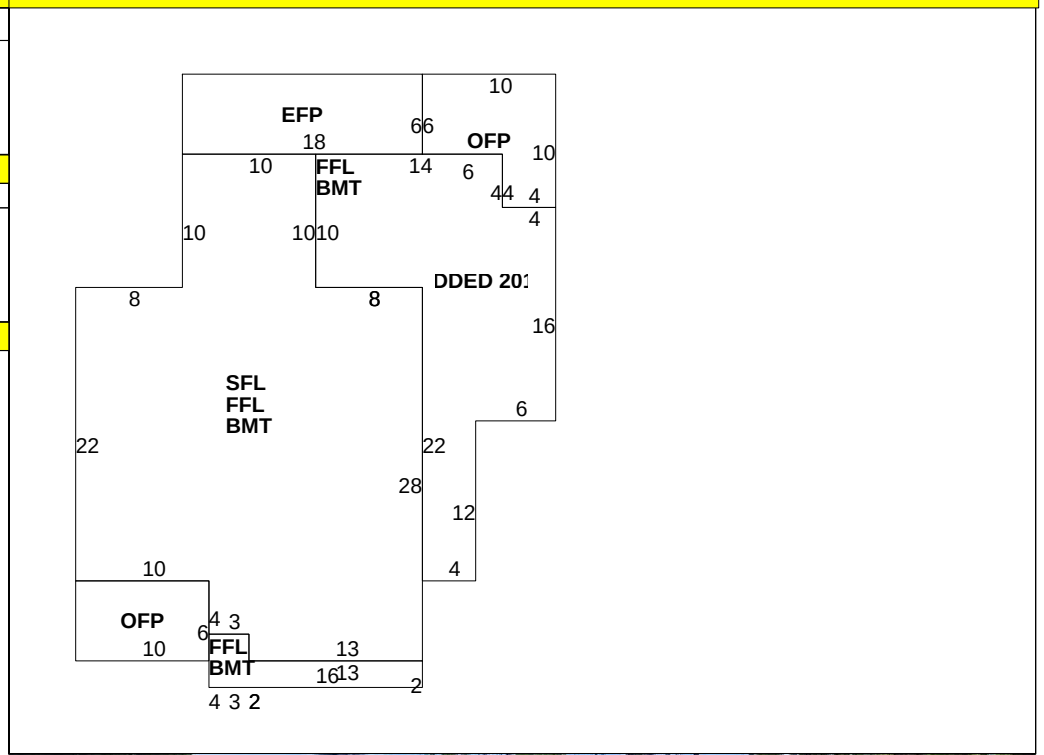

OB-OUTBUILDING & YARD ITEMS(L) / XF-BUILDING EXTRA FEATURES(B)

Code	Description	Sub	Sub Descript	L/B	Units	Unit Price	Yr	Gde	Dp Rt	Cnd	%Cnd	Apr Value
32	BARN/LFT			L	384	19.55	1943	A		FR	50	3,800
04	GARAGE/L			L	480	30.48	1943	A		AV	60	8,800
02	SHED/FR			L	240	7.48	1943	A		FR	50	900
02	SHED/FR			L	80	7.48	1943	A		FR	50	300
MN	MANUAL	OB	Outbuilding	L	1	30.00	2011	A		AV	60	0

BUILDING SUB-AREA SUMMARY SECTION

Code	Description	Living Area	Gross Area	Eff. Area	Unit Cost	Undeprec. Value
BMT	BASEMENT	0	1,112		13.76	15,303
EFP	ENCL PORCH	0	108		20.43	2,206
FFL	1ST FLOOR	1,112	1,112		68.93	76,655
OFP	OPEN PORCH	0	136		7.10	965
SFL	2ND FLOOR	762	762		68.93	52,528
	Ttl. Gross Liv/Lease Area:	1,874	3,230	2,142		147,658