Property Location: 538 PARKER ST | **MAP ID: 61/ 7/ 40/ /** | **Bldg Name:** | **State Use: 101**

Vision ID: 4763 | **Account #4836** | **Bldg #: 1 of 1** | **Sec #: 1 of 1** | **Card 1 of 1** | **Print Date: 12/06/2016 09:09**

CURRENT OWNER	TOPO.	UTILITIES	STRT./ROAD	LOCATION
MOYLAN JAMES E MOYLAN MARGARET A 538 PARKER ST EAST LONGMEADOW, MA 01028 Additional Owners:		1 TYPCL		

SUPPLEMENTAL DATA

Other ID:	Received
SP Permit	Field 7
Chapter Land	Field 8
OC Dates	Field 9
In+Ex FY	Field 10
Mailed	
GIS ID: F_388365_2853210	*ASSOC PID#*

CURRENT ASSESSMENT

Description	Code	Appraised Value	Assessed Value
RESIDNTL.	101	206,100	206,100
RES LAND	101	94,000	94,000
RESIDNTL.	101	10,500	10,500
		Total 310,600	310,600

1006
AST LONGMEADOW, M

VISION

RECORD OF OWNERSHIP

	BK-VOL/PAGE	SALE DATE	q/u	v/i	SALE PRICE	V.C.
MOYLAN JAMES E	09725/ 0491	12/27/1996	U	I	183,000	
REALE MARIANNE M	03889/ 0143	12/06/1973	U	I	0	

PREVIOUS ASSESSMENTS (HISTORY)

Yr.	Code	Assessed Value	Yr.	Code	Assessed Value	Yr.	Code	Assessed Value
2016	101	204,000	2015	101	204,000	2014	B	205,700
2016	101	91,200	2015	101	91,200	2014	L	94,200
2016	101	10,500	2015	101	10,500	2014	O	11,400
		Total: 305,700			*Total:* 305,700			*Total:* 311,300

EXEMPTIONS

Year	Type	Description	Amount
		Total:	

OTHER ASSESSMENTS

Code	Description	Number	Amount	Comm. Int.

This signature acknowledges a visit by a Data Collector or Assessor

ASSESSING NEIGHBORHOOD

NBHD/ SUB	NBHD Name	Street Index Name	Tracing	Batch
0001/A			101	MG

NOTES

APPRAISED VALUE SUMMARY

Appraised Bldg. Value (Card)	206,100
Appraised XF (B) Value (Bldg)	0
Appraised OB (L) Value (Bldg)	10,500
Appraised Land Value (Bldg)	94,000
Special Land Value	0
Total Appraised Parcel Value	310,600
Valuation Method:	C
Adjustment:	0
Net Total Appraised Parcel Value	**310,600**

BUILDING PERMIT RECORD

Permit ID	Issue Date	Type	Description	Amount	Insp. Date	% Comp.	Date Comp.	Comments
201401961	06/18/2014	25	WINDOWS	3,544	04/06/2015	100	04/06/2015	NVC
92	05/01/1990	MN	Manual Note	3,800		0		SUN ROOM

VISIT/ CHANGE HISTORY

Date	Type	IS	ID	Cd.	Purpose/Result
04/06/2015			317	15	PERMIT VISIT
06/13/2009			317	14	INSPECTED
04/24/2008			250	P1	PHONE MESSAG
11/30/2007			317	2	MEASURED
11/05/2001			247	14	INSPECTED

LAND LINE VALUATION SECTION

B #	Use Code	Use Description	Zone	D	Front	Depth	Units		Unit Price	I. Factor	S.A.	Acre Disc	C. Factor	ST. Idx	Adj.	Notes- Adj	Special Pricing Spec Use		Spec Calc		S Adj Fact	Adj. Unit Price	Land Value
1	101	ONE FAM	RA				31,874	SF	2.67	1.2300	7	1.0000	1.00	MG	1.00				TRF1	.90	.90	2.95	94,000

Total Card Land Units: 0.73 AC | **Parcel Total Land Area:** 0.73 AC | **Total Land Value:** 94,000

Property Location: 538 PARKER ST **MAP ID:** 61/ 7/ 40/ / **Bldg Name:** **State Use:** 101

Vision ID: 4763 **Account #** 4836 **Bldg #:** 1 of 1 **Sec #:** 1 of 1 **Card** 1 of 1 **Print Date:** 12/06/2016 09:09

CONSTRUCTION DETAIL

Element	Cd.	Ch.	Description
Style	19		RANCH
Model	01		RESIDENTIAL
Grade	C+		AVG. (+)
Stories	1.00		1 Story
Foundation	1		
Exterior Wall 1	4		VINYL
Exterior Wall 2	16		STONE VENR
Roof Structure	1		GABLE
Roof Cover	1		ASPHALT SH
Interior Wall 1	1		DRYWALL
Interior Wall 2			
Interior Floor 1	4		CARPET
Interior Floor 2			
Heat Fuel	1		OIL
Heat Type	1		FORCED H/A
AC Type	03		FULL
Bedrooms	4		
Full Baths	3		
Half Baths	0		
Extra Fixtures	0		
Total Rooms	7		
Bath Style			
Kitchen Style	A		AVERAGE
Kitchens	1		
Extra Kitchens	0		
Frame	1		WOOD
Basement Floor	12		
Bsmt Garage			
Units	1		
WS Flues			
FBM Quality	3		
Fireplaces	2		

CONSTRUCTION DETAIL (CONTINUED)

Element	Cd.	Ch.	Description
#Heat Sys	1		
Central Vac	1		YES
FBM Sqft	1240		
Int vs Ext	S		

MIXED USE

Code	Description	Percentage
101	ONE FAM	100

COST/MARKET VALUATION

Adj. Base Rate:	89.82
Replace Cost	286,244
AYB	1972
EYB	1986
Dep Code	AG
Remodel Rating	
Year Remodeled	
Dep %	28
Functional Obslnc	
External Obslnc	
Cost Trend Factor	1
Condition	
% Complete	
Overall % Cond	72
Apprais Val	206,100
Dep % Ovr	0
Dep Ovr Comment	
Misc Imp Ovr	0
Misc Imp Ovr Comment	
Cost to Cure Ovr	0
Cost to Cure Ovr Comment	

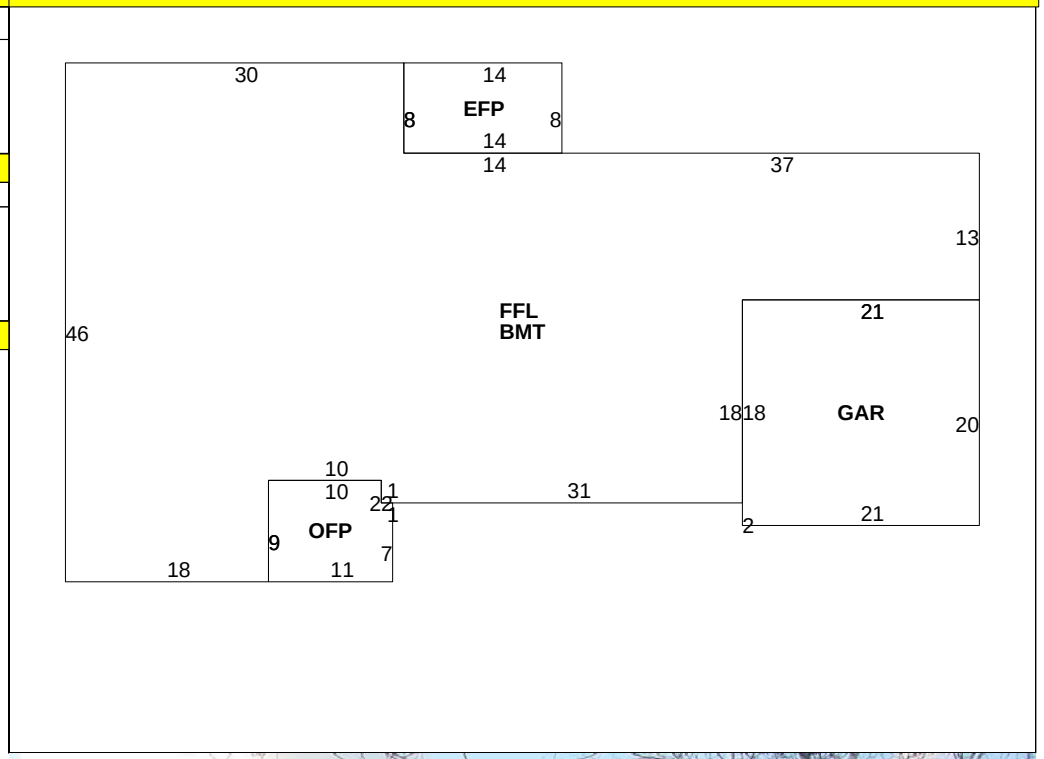

OB-OUTBUILDING & YARD ITEMS(L) / XF-BUILDING EXTRA FEATURES(B)

Code	Description	Sub	Sub Descript	L/B	Units	Unit Price	Yr	Gde	Dp Rt	Cnd	%Cnd	Apr Value
11	POOL I-V	OB	Outbuilding	L	496	29.00	1979	A		AV	60	8,600
02	SHED/FR			L	96	7.48	1990	A		GD	70	500
19	PATIO			L	412	5.75	1979	A		AV	60	1,400

BUILDING SUB-AREA SUMMARY SECTION

Code	Description	Living Area	Gross Area	Eff. Area	Unit Cost	Undeprec. Value
BMT	BASEMENT	0	2,479		17.97	44,549
EFP	ENCL PORCH	0	112		27.27	3,054
FFL	1ST FLOOR	2,479	2,479		89.82	222,654
GAR	GARAGE	0	420		35.93	15,089
OFP	OPEN PORCH	0	97		9.26	898
	Ttl. Gross Liv/Lease Area:	2,479	5,587	3,187		286,244