Property Location: 32 HIGH PINE CR | **MAP ID:** 62/ 15B/ 37R/ / | **Bldg Name:** | **State Use:** 101

Vision ID: 4774 | **Account #**4847 | **Bldg #:** 1 of 1 | **Sec #:** 1 of 1 | **Card** 1 of 1 | **Print Date:** 12/06/2016 09:11

CURRENT OWNER	TOPO.	UTILITIES	STRT./ROAD	LOCATION
BESSER GARY W BESSER MARY G 32 HIGH PINE CR EAST LONGMEADOW, MA 01028 Additional Owners:				

SUPPLEMENTAL DATA

Other ID:	Received
SP Permit	Field 7
Chapter Land	Field 8
OC Dates	Field 9
In+Ex FY	Field 10
Mailed	
GIS ID: F_389853_2851868	*ASSOC PID#*

CURRENT ASSESSMENT

Description	Code	Appraised Value	Assessed Value
RESIDNTL.	101	271,700	271,700
RES LAND	101	106,900	106,900
RESIDNTL.	101	2,300	2,300
		Total 380,900	380,900

1006
AST LONGMEADOW, M

VISION

RECORD OF OWNERSHIP

	BK-VOL/PAGE	SALE DATE	q/u	v/i	SALE PRICE	V.C.
BESSER GARY W	17334/ 259	06/03/2008	U	I	400,000	
ZACHARY,THOMAS M	14320/ 143	07/07/2004	U	I	439,000	
RICHARDS CHARLES H,	06488/ 586	05/18/1987	U	I	1	B
CJBUILDERS	0/ 0		U		0	

PREVIOUS ASSESSMENTS (HISTORY)

Yr.	Code	Assessed Value	Yr.	Code	Assessed Value	Yr.	Code	Assessed Value
2016	101	268,900	2015	101	268,900	2014	B	269,200
2016	101	103,700	2015	101	103,700	2014	L	107,400
2016	101	2,300	2015	101	2,300	2014	O	1,900
		Total: 374,900			*Total:* 374,900			*Total:* 378,500

EXEMPTIONS

Year	Type	Description	Amount
		Total:	

OTHER ASSESSMENTS

Code	Description	Number	Amount	Comm. Int.

This signature acknowledges a visit by a Data Collector or Assessor

ASSESSING NEIGHBORHOOD

NBHD/ SUB	NBHD Name	Street Index Name	Tracing	Batch
0001/A			101	NG

NOTES

FY 12 ABT GRANTED. SUB DIV #904

APPRAISED VALUE SUMMARY

Appraised Bldg. Value (Card)	271,700
Appraised XF (B) Value (Bldg)	0
Appraised OB (L) Value (Bldg)	2,300
Appraised Land Value (Bldg)	106,900
Special Land Value	0
Total Appraised Parcel Value	380,900
Valuation Method:	C
Adjustment:	0
Net Total Appraised Parcel Value	**380,900**

BUILDING PERMIT RECORD

Permit ID	Issue Date	Type	Description	Amount	Insp. Date	% Comp.	Date Comp.	Comments
47	03/01/1987	MN	Manual Note	120,000		0		COLONIAL

VISIT/ CHANGE HISTORY

Date	Type	IS	ID	Cd.	Purpose/Result
12/21/2007			317	3	MEAS+INSPCTD
12/06/2007			250	22	MAILER SENT
06/28/2007			311	2	MEASURED
11/13/2001			247	13	MISSED APPT
10/01/2001			250	22	MAILER SENT

LAND LINE VALUATION SECTION

B #	Use Code	Use Description	Zone	D	Front	Depth	Units		Unit Price	I. Factor	S.A.	Acre Disc	C. Factor	ST. Idx	Adj.	Notes- Adj	Special Pricing Spec Use	Special Pricing Spec Calc	S Adj Fact	Adj. Unit Price	Land Value
1	101	ONE FAM	RA				27,136	SF	3.08	1.2800	8	1.0000	1.00	NG	1.00				1.00	3.94	106,900

Total Card Land Units: 0.62 AC | **Parcel Total Land Area:** 0.62 AC | **Total Land Value:** 106,900

Property Location: 32 HIGH PINE CR **MAP ID:** 62/ 15B/ 37R/ / **Bldg Name:** **State Use:** 101

Vision ID: 4774 **Account #** 4847 **Bldg #:** 1 of 1 **Sec #:** 1 of 1 **Card** 1 of 1 **Print Date:** 12/06/2016 09:11

CONSTRUCTION DETAIL

Element	Cd.	Ch.	Description
Style	06		COLONIAL
Model	01		RESIDENTIAL
Grade	B		GOOD
Stories	2.00		2 Story
Foundation	1		CONCRETE
Exterior Wall 1	4		VINYL
Exterior Wall 2	8		BRICK VENR
Roof Structure	1		GABLE
Roof Cover	1		ASPHALT SH
Interior Wall 1	1		DRYWALL
Interior Wall 2			
Interior Floor 1	3		HARDWOOD
Interior Floor 2	4		CARPET
Heat Fuel	1		OIL
Heat Type	1		FORCED H/A
AC Type	03		FULL
Bedrooms	4		
Full Baths	2		
Half Baths	1		
Extra Fixtures	0		
Total Rooms	9		
Bath Style	V		VERY GOOD
Kitchen Style	G		GOOD
Kitchens	1		
Extra Kitchens	0		
Frame	1		WOOD
Basement Floor	12		
Bsmt Garage			
Units	1		
WS Flues			
FBM Quality	3		
Fireplaces	1		

CONSTRUCTION DETAIL (CONTINUED)

Element	Cd.	Ch.	Description
#Heat Sys	1		
Central Vac	1		YES
FBM Sqft	544		
Int vs Ext	S		

MIXED USE

Code	Description	Percentage
101	ONE FAM	100

COST/MARKET VALUATION

Adj. Base Rate:	97.52
Replace Cost	319,665
AYB	1987
EYB	1999
Dep Code	GD
Remodel Rating	
Year Remodeled	
Dep %	15
Functional Obslnc	
External Obslnc	
Cost Trend Factor	1
Condition	
% Complete	
Overall % Cond	85
Apprais Val	271,700
Dep % Ovr	0
Dep Ovr Comment	
Misc Imp Ovr	0
Misc Imp Ovr Comment	
Cost to Cure Ovr	0
Cost to Cure Ovr Comment	

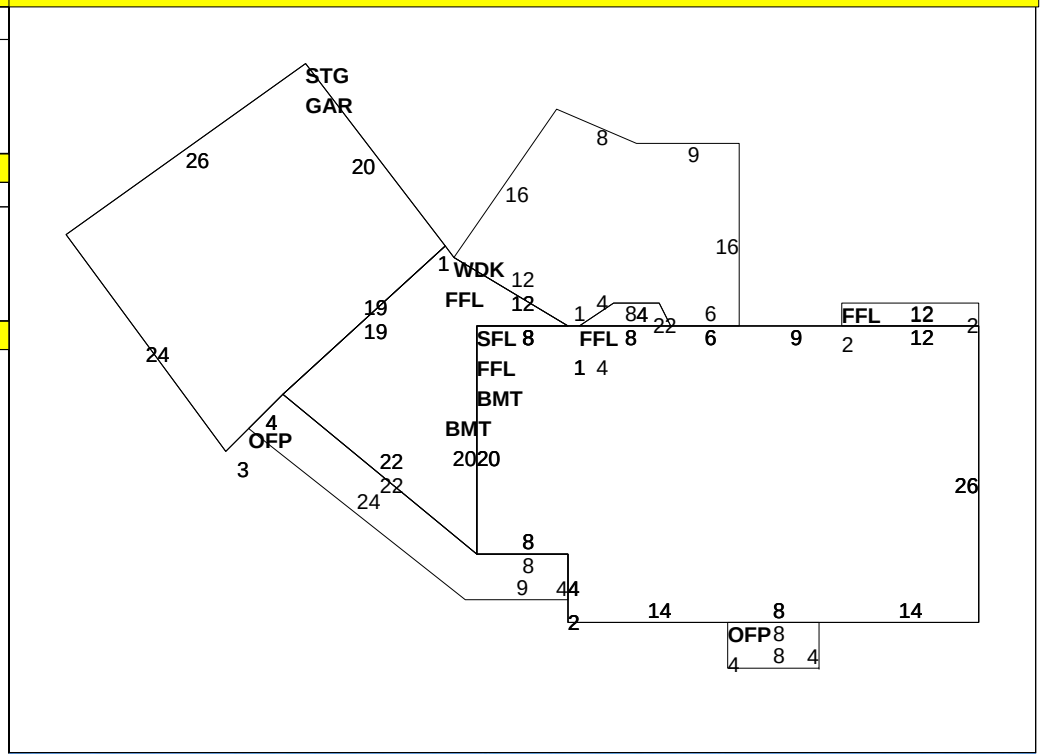

OB-OUTBUILDING & YARD ITEMS(L) / XF-BUILDING EXTRA FEATURES(B)

Code	Description	Sub	Sub Descript	L/B	Units	Unit Price	Yr	Gde	Dp Rt	Cnd	%Cnd	Apr Value
02	SHED/FR			L	288	7.48	1987	V		GD	70	2,300

BUILDING SUB-AREA SUMMARY SECTION

Code	Description	Living Area	Gross Area	Eff. Area	Unit Cost	Undeprec. Value
BMT	BASEMENT	0	1,359		19.52	26,525
FFL	1ST FLOOR	1,395	1,395		97.52	136,038
GAR	GARAGE	0	565		39.01	22,039
OFP	OPEN PORCH	0	158		9.88	1,560
SFL	2ND FLOOR	1,096	1,096		97.52	106,880
STG	STORAGE	0	565		39.01	22,039
WDK	WOOD DECK	0	337		13.60	4,583
	Ttl. Gross Liv/Lease Area:	2,491	5,475	3,278		319,665