Property Location: 18 TAMARAK DR | **MAP ID: 83/ 18/ 45/ /** | **Bldg Name:** | **State Use: 101**

Vision ID: 5680 | **Account #5762** | **Bldg #: 1 of 1** | **Sec #: 1 of 1** | **Card 1 of 1** | **Print Date: 12/06/2016 15:51**

CURRENT OWNER	TOPO.	UTILITIES	STRT./ROAD	LOCATION
MORIARTY RICHARD E MORIARTY THERESE 18 TAMARAK DR EAST LONGMEADOW, MA 01028 Additional Owners:		1 TYPCL		

SUPPLEMENTAL DATA

Other ID:	Received
SP Permit	Field 7
Chapter Land	Field 8
OC Dates	Field 9
In+Ex FY	Field 10
Mailed	
GIS ID: F_392295_2858360	ASSOC PID#

CURRENT ASSESSMENT

Description	Code	Appraised Value	Assessed Value
RESIDNTL.	101	255,700	255,700
RES LAND	101	106,300	106,300
	Total	362,000	362,000

1006
AST LONGMEADOW, M

VISION

RECORD OF OWNERSHIP

	BK-VOL/PAGE	SALE DATE	q/u	v/i	SALE PRICE	V.C.
MORIARTY RICHARD E	07713/ 0213	05/29/1991	U	V	60,000	
WARD JOSEPH E + D SMITH E	0/ 0		U		0	

PREVIOUS ASSESSMENTS (HISTORY)

Yr.	Code	Assessed Value	Yr.	Code	Assessed Value	Yr.	Code	Assessed Value
2016	101	248,300	2015	101	248,300	2014	B	239,000
2016	101	103,100	2015	101	103,100	2014	L	106,500
	Total:	351,400		Total:	351,400		Total:	345,500

EXEMPTIONS

Year	Type	Description	Amount
		Total:	

OTHER ASSESSMENTS

Code	Description	Number	Amount	Comm. Int.

This signature acknowledges a visit by a Data Collector or Assessor

ASSESSING NEIGHBORHOOD

NBHD/ SUB	NBHD Name	Street Index Name	Tracing	Batch
0001/A			101	NG

NOTES

SUB DIV #659

PER OWNER 4/11 BMT UNDER ENTIRE HOUSE

APPRAISED VALUE SUMMARY

Appraised Bldg. Value (Card)	255,700
Appraised XF (B) Value (Bldg)	0
Appraised OB (L) Value (Bldg)	0
Appraised Land Value (Bldg)	106,300
Special Land Value	0
Total Appraised Parcel Value	362,000
Valuation Method:	C
Adjustment:	0
Net Total Appraised Parcel Value	**362,000**

BUILDING PERMIT RECORD

Permit ID	Issue Date	Type	Description	Amount	Insp. Date	% Comp.	Date Comp.	Comments
201202198	05/11/2012	GEN	GENERATOR	6,249		0		
120	05/01/1992	MN	Manual Note	140,000		0		DWELLING

VISIT/ CHANGE HISTORY

Date	Type	IS	ID	Cd.	Purpose/Result
07/13/2012			317	15	PERMIT VISIT
10/27/2005			311	2	MEASURED
01/18/2000			250	22	MAILER SENT
12/14/1999			247	2	MEASURED
02/08/1993			131	15	PERMIT VISIT

LAND LINE VALUATION SECTION

B #	Use Code	Use Description	Zone	D	Front	Depth	Units		Unit Price	I. Factor	S.A.	Acre Disc	C. Factor	ST. Idx	Adj.	Notes- Adj	Special Pricing Spec Use	Special Pricing Spec Calc	S Adj Fact	Adj. Unit Price	Land Value
1	101	ONE FAM	RA				25,200	SF	3.30	1.2800	8	1.0000	1.00	NG	1.00				1.00	4.22	106,300

Total Card Land Units: 0.58 AC | **Parcel Total Land Area:** 0.58 AC | **Total Land Value:** 106,300

Property Location: 18 TAMARAK DR **MAP ID:** 83/ 18/ 45/ / **Bldg Name:** **State Use:** 101

Vision ID: 5680 **Account #**5762 **Bldg #:** 1 of 1 **Sec #:** 1 of 1 **Card** 1 of 1 **Print Date:** 12/06/2016 15:51

CONSTRUCTION DETAIL

Element	Cd.	Ch.	Description
Style	19		RANCH
Model	01		RESIDENTIAL
Grade	B-		GOOD (-)
Stories	1.00		1 STORY
Foundation	1		CONCRETE
Exterior Wall 1	4		VINYL
Exterior Wall 2	8		BRICK VENR
Roof Structure	1		GABLE
Roof Cover	1		ASPHALT SH
Interior Wall 1	1		DRYWALL
Interior Wall 2			
Interior Floor 1	4		CARPET
Interior Floor 2	3		HARDWOOD
Heat Fuel	2		GAS
Heat Type	1		FORCED H/A
AC Type	03		FULL
Bedrooms	3		
Full Baths	2		
Half Baths	1		
Extra Fixtures	1		
Total Rooms	7		
Bath Style	G		GOOD
Kitchen Style	G		GOOD
Kitchens	1		
Extra Kitchens	0		
Frame	1		WOOD
Basement Floor	12		CONCRETE
Bsmt Garage			
Units	1		
WS Flues			
FBM Quality	1		
Fireplaces	1		

CONSTRUCTION DETAIL (CONTINUED)

Element	Cd.	Ch.	Description
#Heat Sys	1		
Central Vac	0		NO
FBM Sqft	967		
Int vs Ext	S		SAME

MIXED USE

Code	Description	Percentage
101	ONE FAM	100

COST/MARKET VALUATION

Adj. Base Rate:	91.91
Replace Cost	290,533
AYB	1992
EYB	2002
Dep Code	GD
Remodel Rating	
Year Remodeled	
Dep %	12
Functional Obslnc	
External Obslnc	
Cost Trend Factor	1
Condition	
% Complete	
Overall % Cond	88
Apprais Val	255,700
Dep % Ovr	0
Dep Ovr Comment	
Misc Imp Ovr	0
Misc Imp Ovr Comment	
Cost to Cure Ovr	0
Cost to Cure Ovr Comment	

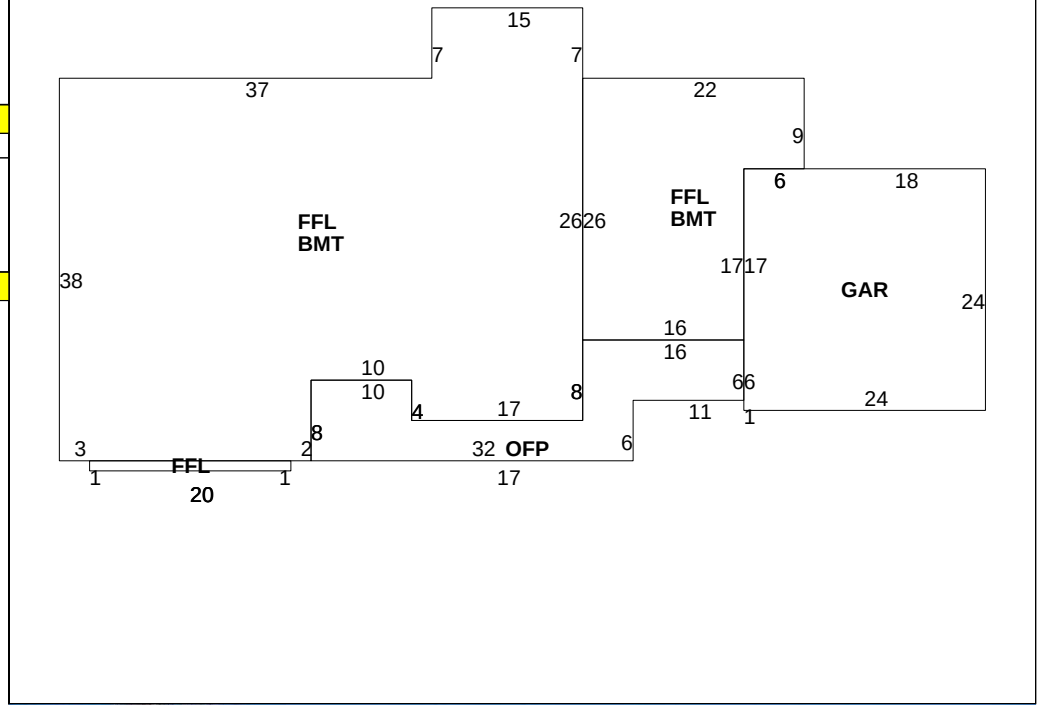

OB-OUTBUILDING & YARD ITEMS(L) / XF-BUILDING EXTRA FEATURES(B)

Code	Description	Sub	Sub Descript	L/B	Units	Unit Price	Yr	Gde	Dp Rt	Cnd	%Cnd	Apr Value

BUILDING SUB-AREA SUMMARY SECTION

Code	Description	Living Area	Gross Area	Eff. Area	Unit Cost	Undeprec. Value
BMT	BASEMENT	0	2,403		18.40	44,210
FFL	1ST FLOOR	2,423	2,423		91.91	222,702
GAR	GARAGE	0	576		36.70	21,140
OFP	OPEN PORCH	0	274		9.06	2,482
	Ttl. Gross Liv/Lease Area:	2,423	5,676	3,161		290,533