Property Location: 76 BRYNMAWR DR | MAP ID: 94/ 29/ 47/ / | Bldg Name: | State Use: 101

Vision ID: 6081 | Account #6164 | Bldg #: 1 of 1 | Sec #: 1 of 1 | Card 1 of 1 | Print Date: 12/07/2016 09:06

CURRENT OWNER	TOPO.	UTILITIES	STRT./ROAD	LOCATION
REARDON EMMETT W REARDON CONNIE R 76 BRYNMAWR DR EAST LONGMEADOW, MA 01028 Additional Owners:		1 TYPCL		

SUPPLEMENTAL DATA

Other ID:	Received
SP Permit	Field 7
Chapter Land	Field 8
OC Dates	Field 9
In+Ex FY	Field 10
Mailed	
GIS ID: F_395108_2841277	ASSOC PID#

CURRENT ASSESSMENT

Description	Code	Appraised Value	Assessed Value
RESIDNTL.	101	164,300	164,300
RES LAND	101	102,000	102,000
RESIDNTL.	101	14,500	14,500
Total		280,800	280,800

1006
AST LONGMEADOW, M

VISION

RECORD OF OWNERSHIP

	BK-VOL/PAGE	SALE DATE	q/u	v/i	SALE PRICE	V.C.
REARDON EMMETT W	08929/ 0348	08/31/1994	U	I	184,900	
OSTROMECKI WALTER B +	07647/ 0345	02/28/1991	U	I	169,150	
WITWER DALE E	03589/ 0324	05/21/1971	U	I	0	

PREVIOUS ASSESSMENTS (HISTORY)

Yr.	Code	Assessed Value	Yr.	Code	Assessed Value	Yr.	Code	Assessed Value
2016	101	162,600	2015	101	162,600	2014	B	160,300
2016	101	98,800	2015	101	98,800	2014	L	101,900
2016	101	14,500	2015	101	14,500	2014	O	15,300
	Total:	275,900		Total:	275,900		Total:	277,500

EXEMPTIONS

Year	Type	Description	Amount
		Total:	

OTHER ASSESSMENTS

Code	Description	Number	Amount	Comm. Int.

This signature acknowledges a visit by a Data Collector or Assessor

ASSESSING NEIGHBORHOOD

NBHD/ SUB	NBHD Name	Street Index Name	Tracing	Batch
0001/A			101	MG

NOTES

APPRAISED VALUE SUMMARY

Appraised Bldg. Value (Card)	164,300
Appraised XF (B) Value (Bldg)	0
Appraised OB (L) Value (Bldg)	14,500
Appraised Land Value (Bldg)	102,000
Special Land Value	0
Total Appraised Parcel Value	280,800
Valuation Method:	C
Adjustment:	0
Net Total Appraised Parcel Value	**280,800**

BUILDING PERMIT RECORD

Permit ID	Issue Date	Type	Description	Amount	Insp. Date	% Comp.	Date Comp.	Comments
251	01/01/1984	MN	Manual Note	0		0		POOL HOUSE
148	01/01/1983	MN	Manual Note	0		0		POOL

VISIT/ CHANGE HISTORY

Date	Type	IS	ID	Cd.	Purpose/Result
06/16/2005			274	3	MEAS+INSPCTD
04/08/2000			247	14	INSPECTED
11/22/1999			247	2	MEASURED
03/10/1992			170	3	MEAS+INSPCTD
04/05/1985			500	15	PERMIT VISIT

LAND LINE VALUATION SECTION

B #	Use Code	Use Description	Zone	D	Front	Depth	Units		Unit Price	I. Factor	S.A.	Acre Disc	C. Factor	ST. Idx	Adj.	Notes- Adj	Special Pricing Spec Use	Special Pricing Spec Calc	S Adj Fact	Adj. Unit Price	Land Value
1	101	ONE FAM	RA				25,000	SF	3.32	1.2300	7	1.0000	1.00	MG	1.00				1.00	4.08	102,000

Total Card Land Units: 0.57 AC | Parcel Total Land Area: 0.57 AC | Total Land Value: 102,000

Property Location: 76 BRYNMAWR DR **MAP ID:** 94/ 29/ 47/ / **Bldg Name:** **State Use:** 101

Vision ID: 6081 **Account #** 6164 **Bldg #:** 1 of 1 **Sec #:** 1 of 1 **Card** 1 of 1 **Print Date:** 12/07/2016 09:06

CONSTRUCTION DETAIL

Element	Cd.	Ch.	Description
Style	05		CAPE
Model	01		RESIDENTIAL
Grade	C		AVERAGE
Stories	1.75		1 3/4 STORIES
Foundation	1		CONCRETE
Exterior Wall 1	2		CLAPBOARD
Exterior Wall 2			
Roof Structure	1		GABLE
Roof Cover	1		ASPHALT SH
Interior Wall 1	1		DRYWALL
Interior Wall 2			
Interior Floor 1	4		CARPET
Interior Floor 2	3		HARDWOOD
Heat Fuel	2		GAS
Heat Type	3		FORCED H/W
AC Type	01		NONE
Bedrooms	3		
Full Baths	2		
Half Baths	0		
Extra Fixtures	2		
Total Rooms	8		
Bath Style	A		AVERAGE
Kitchen Style	A		AVERAGE
Kitchens	1		
Extra Kitchens	0		
Frame	1		WOOD
Basement Floor	14		ASPHL TILE
Bsmt Garage			
Units	1		
WS Flues			
FBM Quality	1		
Fireplaces	2		

CONSTRUCTION DETAIL (CONTINUED)

Element	Cd.	Ch.	Description
#Heat Sys	1		
Central Vac	0		NO
FBM Sqft	833		
Int vs Ext	S		SAME

MIXED USE

Code	Description	Percentage
101	ONE FAM	100

COST/MARKET VALUATION

Adj. Base Rate:	84.38
Replace Cost	213,397
AYB	1971
EYB	1991
Dep Code	GD
Remodel Rating	
Year Remodeled	
Dep %	23
Functional Obslnc	
External Obslnc	
Cost Trend Factor	1
Condition	
% Complete	
Overall % Cond	77
Apprais Val	164,300
Dep % Ovr	0
Dep Ovr Comment	
Misc Imp Ovr	0
Misc Imp Ovr Comment	
Cost to Cure Ovr	0
Cost to Cure Ovr Comment	

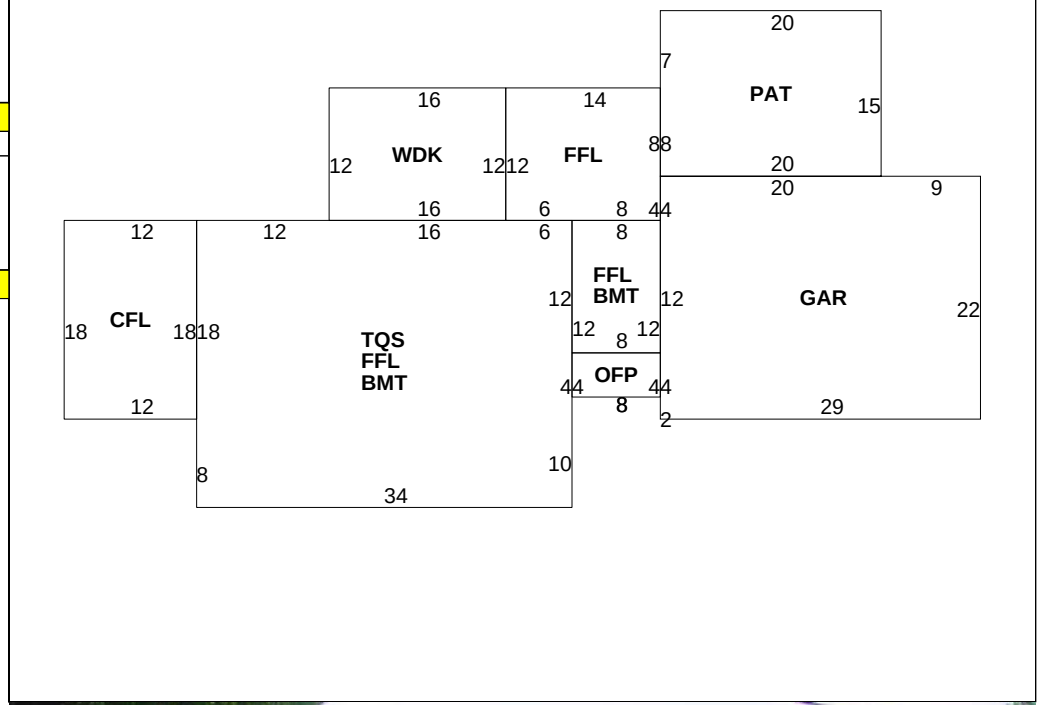

OB-OUTBUILDING & YARD ITEMS(L) / XF-BUILDING EXTRA FEATURES(B)

Code	Description	Sub	Sub Descript	L/B	Units	Unit Price	Yr	Gde	Dp Rt	Cnd	%Cnd	Apr Value
11	POOL I-V	OB	Outbuilding	L	800	29.00	1983	A		AV	60	13,900
02	SHED/FR			L	140	7.48	1984	A		AV	60	600

BUILDING SUB-AREA SUMMARY SECTION

Code	Description	Living Area	Gross Area	Eff. Area	Unit Cost	Undeprec. Value
BMT	BASEMENT	0	980		16.88	16,538
CFL	CATHEDRAL CE	216	216		86.72	18,732
FFL	1ST FLOOR	1,148	1,148		84.38	96,868
GAR	GARAGE	0	638		33.73	21,517
OFP	OPEN PORCH	0	32		7.91	253
PAT	PATIO	0	300		4.22	1,266
TQS	3/4 STORY	663	884		63.29	55,944
WDK	WOOD DECK	0	192		11.87	2,278
	Ttl. Gross Liv/Lease Area:	2,027	4,390	2,529		213,397