Property Location: 21 DEWEY AV | MAP ID: 15B/ 15/ B-1/ / | Bldg Name: | State Use: 101

Vision ID: 6574 | Account #6680 | Bldg #: 1 of 1 | Sec #: 1 of 1 | Card 1 of 1 | Print Date: 12/07/2016 12:25

CURRENT OWNER

RUTHERFORD LEEDS PAMELA

21 DEWEY AV

EAST LONGMEADOW, MA 01028

Additional Owners:

TOPO.	UTILITIES	STRT./ROAD	LOCATION

SUPPLEMENTAL DATA

Other ID:	Received
SP Permit	Field 7
Chapter Land	Field 8
OC Dates	Field 9
In+Ex FY	Field 10
Mailed	
GIS ID: F_379613_2852472	ASSOC PID#

CURRENT ASSESSMENT

Description	Code	Appraised Value	Assessed Value
RESIDNTL.	101	76,500	76,500
RES LAND	101	53,300	53,300
RESIDNTL.	101	7,300	7,300
Total		137,100	137,100

1006
AST LONGMEADOW, M

VISION

RECORD OF OWNERSHIP

	BK-VOL/PAGE	SALE DATE	q/u	v/i	SALE PRICE	V.C.
RUTHERFORD LEEDS PAMELA	12363/ 356	05/29/2002	U	I	147,000	G
BILODEAU STACY	0/ 0		U		0	

PREVIOUS ASSESSMENTS (HISTORY)

Yr.	Code	Assessed Value	Yr.	Code	Assessed Value	Yr.	Code	Assessed Value
2016	101	75,500	2015	101	75,500	2014	B	78,300
2016	101	57,500	2015	101	57,500	2014	L	56,800
2016	101	7,300	2015	101	7,300	2014	O	7,800
	Total:	140,300		Total:	140,300		Total:	142,900

EXEMPTIONS

Year	Type	Description	Amount
		Total:	

OTHER ASSESSMENTS

Code	Description	Number	Amount	Comm. Int.

This signature acknowledges a visit by a Data Collector or Assessor

APPRAISED VALUE SUMMARY

Appraised Bldg. Value (Card)	76,500
Appraised XF (B) Value (Bldg)	0
Appraised OB (L) Value (Bldg)	7,300
Appraised Land Value (Bldg)	53,300
Special Land Value	0
Total Appraised Parcel Value	137,100
Valuation Method:	C
Adjustment:	0
Net Total Appraised Parcel Value	**137,100**

ASSESSING NEIGHBORHOOD

NBHD/ SUB	NBHD Name	Street Index Name	Tracing	Batch
0001/A			101	MF

NOTES

LB ECON=FACTORY INCLUDES 15B 15A 15 -

SUB DIV 940

BUILDING PERMIT RECORD

Permit ID	Issue Date	Type	Description	Amount	Insp. Date	% Comp.	Date Comp.	Comments
239	08/21/2000	9	ALTERATION	400		0		
10	02/01/1996	4	ADDITION	30,000		0		

VISIT/ CHANGE HISTORY

Date	Type	IS	ID	Cd.	Purpose/Result
04/02/2004			250	22	MAILER SENT
03/22/2004			311	2	MEASURED

LAND LINE VALUATION SECTION

B #	Use Code	Use Description	Zone	D	Front	Depth	Units		Unit Price	I. Factor	S.A.	Acre Disc	C. Factor	ST. Idx	Adj.	Notes- Adj	Special Pricing Spec Use	Special Pricing Spec Calc	S Adj Fact	Adj. Unit Price	Land Value
1	101	ONE FAM	RC				9,800	SF	7.96	0.7600	3	1.0000	0.90	MF	1.00	CLOC			1.00	5.44	53,300

Total Card Land Units: 0.22 AC | Parcel Total Land Area: 0.22 AC | Total Land Value: 53,300

Property Location: 21 DEWEY AV **MAP ID:** 15B/ 15/ B-1/ / **Bldg Name:** **State Use:** 101

Vision ID: 6574 **Account #**6680 **Bldg #:** 1 of 1 **Sec #:** 1 of 1 **Card** 1 of 1 **Print Date:** 12/07/2016 12:25

CONSTRUCTION DETAIL

Element	Cd.	Ch.	Description
Style	15		OLD STYLE
Model	01		RESIDENTIAL
Grade	C		AVERAGE
Stories	1.75		1 3/4 Stories
Foundation	2		CONC BLOCK
Exterior Wall 1	4		VINYL
Exterior Wall 2			
Roof Structure	1		GABLE
Roof Cover	1		ASPHALT SH
Interior Wall 1	2		PLASTER
Interior Wall 2	1		DRYWALL
Interior Floor 1	4		CARPET
Interior Floor 2	3		HARDWOOD
Heat Fuel	1		OIL
Heat Type	1		FORCED H/A
AC Type	03		FULL
Bedrooms	3		
Full Baths	2		
Half Baths	0		
Extra Fixtures	0		
Total Rooms	6		
Bath Style	A		AVERAGE
Kitchen Style	A		AVERAGE
Kitchens	1		
Extra Kitchens	0		
Frame	1		WOOD
Basement Floor			
Bsmt Garage			
Units	1		
WS Flues			
FBM Quality	3		
Fireplaces	0		

CONSTRUCTION DETAIL (CONTINUED)

Element	Cd.	Ch.	Description
#Heat Sys	1		
Central Vac	0		NO
FBM Sqft	364		
Int vs Ext	S		

MIXED USE

Code	Description	Percentage
101	ONE FAM	100

COST/MARKET VALUATION

Adj. Base Rate:	85.50
Replace Cost	125,339
AYB	1915
EYB	1980
Dep Code	AG
Remodel Rating	
Year Remodeled	
Dep %	34
Functional Obslnc	
External Obslnc	5
Cost Trend Factor	1
Condition	
% Complete	
Overall % Cond	61
Apprais Val	76,500
Dep % Ovr	0
Dep Ovr Comment	
Misc Imp Ovr	0
Misc Imp Ovr Comment	
Cost to Cure Ovr	0
Cost to Cure Ovr Comment	

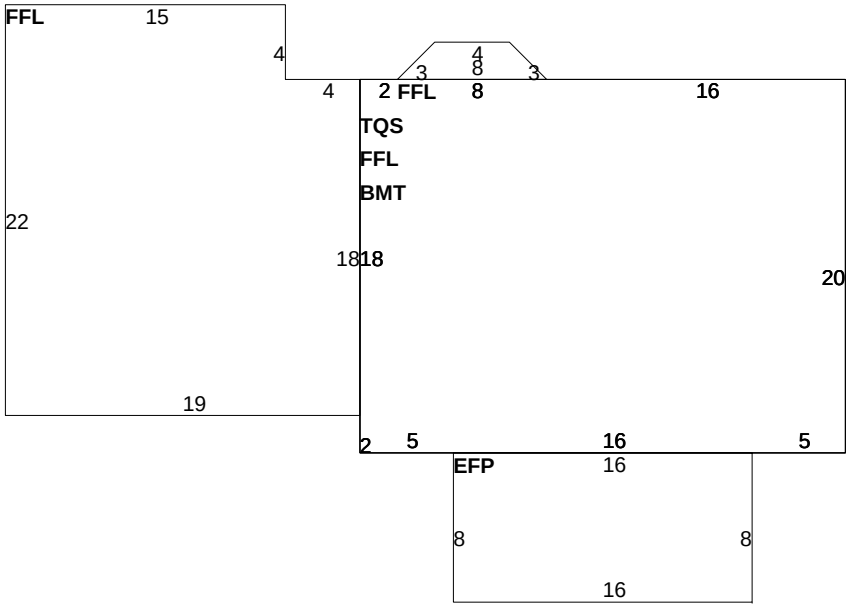

OB-OUTBUILDING & YARD ITEMS(L) / XF-BUILDING EXTRA FEATURES(B)

Code	Description	Sub	Sub Descript	L/B	Units	Unit Price	Yr	Gde	Dp Rt	Cnd	%Cnd	Apr Value
03	GARAGE	OB	Outbuilding	L	432	28.18	1950	A		AV	60	7,300

BUILDING SUB-AREA SUMMARY SECTION

Code	Description	Living Area	Gross Area	Eff. Area	Unit Cost	Undeprec. Value
BMT	BASEMENT	0	520		17.10	8,892
EFP	ENCL PORCH	0	128		25.38	3,249
FFL	1ST FLOOR	934	934		85.50	79,854
TQS	3/4 STORY	390	520		64.12	33,344
	Ttl. Gross Liv/Lease Area:	1,324	2,102	1,466		125,339