Property Location: 22 ELM ST | MAP ID: 26/ 131/ 0/ / | Bldg Name: | State Use: 104

Vision ID: 1745 | Account # 1781 | Bldg #: 1 of 1 | Sec #: 1 of 1 | Card 1 of 1 | Print Date: 12/15/2017 09:18

CURRENT OWNER	TOPO.	UTILITIES	STRT./ROAD	LOCATION
WILSON ANDREW T WILSON MARY E 22 ELM ST EAST LONGMEADOW, MA 01028 Additional Owners:		1 TYPCL		

SUPPLEMENTAL DATA

Other ID:	Received
SP Permit	Field 7
Chapter Land	Field 8
OC Dates	Field 9
In+Ex FY	Field 10
Mailed	
GIS ID: F_381137_2850813	ASSOC PID#

CURRENT ASSESSMENT

Description	Code	Appraised Value	Assessed Value
RESIDNTL.	104	126,200	126,200
RES LAND	104	77,800	77,800
RESIDNTL.	104	5,400	5,400
Total		209,400	209,400

1006
4ST LONGMEADOW, M

VISION

RECORD OF OWNERSHIP

	BK-VOL/PAGE	SALE DATE	q/u	v/i	SALE PRICE	V.C.
WILSON ANDREW T	10168/ 48	02/20/1998	U	I	127,500	
COOLEY MARION L,	02220/ 0589	01/15/1953	U	I	0	

PREVIOUS ASSESSMENTS (HISTORY)

Yr.	Code	Assessed Value	Yr.	Code	Assessed Value	Yr.	Code	Assessed Value
2017	104	124,300	2016	104	122,600	2015	104	128,900
2017	104	76,000	2016	104	73,800	2015	104	73,800
2017	104	5,400	2016	104	5,400	2015	104	5,400
	Total:	205,700		Total:	201,800		Total:	208,100

EXEMPTIONS

Year	Type	Description	Amount
		Total:	

OTHER ASSESSMENTS

Code	Description	Number	Amount	Comm. Int.

This signature acknowledges a visit by a Data Collector or Assessor

APPRAISED VALUE SUMMARY

Appraised Bldg. Value (Card)	126,200
Appraised XF (B) Value (Bldg)	0
Appraised OB (L) Value (Bldg)	5,400
Appraised Land Value (Bldg)	77,800
Special Land Value	0
Total Appraised Parcel Value	209,400
Valuation Method:	C
Adjustment:	0
Net Total Appraised Parcel Value	209,400

ASSESSING NEIGHBORHOOD

NBHD/ SUB	NBHD Name	Street Index Name	Tracing	Batch
0001/A			104	MA

NOTES

3 CAR GAR UNDER BARN.PITCH OF ROOF=ATC
SOME ROUGH FINISH IN ATTIC.

BUILDING PERMIT RECORD

Permit ID	Issue Date	Type	Description	Amount	Insp. Date	% Comp.	Date Comp.	Comments

VISIT/ CHANGE HISTORY

Date	Type	IS	ID	Cd.	Purpose/Result
01/27/2012			317	16	FIELDREV CHG
10/14/2003			274	3	MEAS+INSPCTD
02/24/1992			170	3	MEAS+INSPCTD
01/17/1992			107	2	MEASURED
09/02/1980			500	3	MEAS+INSPCTD

LAND LINE VALUATION SECTION

B #	Use Code	Use Description	Zone	D	Front	Depth	Units		Unit Price	I. Factor	S.A.	Acre Disc	C. Factor	ST. Idx	Adj.	Notes- Adj	Special Pricing Spec Use		Spec Calc		S Adj Fact	Adj. Unit Price	Land Value
1	104	TWO FAM	RC				21,780	SF	3.97	1.0000	5	1.0000	1.00	MA	1.00				TRF2	.90	.90	3.57	77,800

Total Card Land Units: 0.50 AC | Parcel Total Land Area: 0.5 AC | Total Land Value: 77,800

Property Location: 22 ELM ST | **MAP ID:** 26/ 131/ 0/ / | **Bldg Name:** | **State Use:** 104

Vision ID: 1745 | **Account #** 1781 | **Bldg #:** 1 of 1 | **Sec #:** 1 of 1 | **Card** 1 of 1 | **Print Date:** 12/15/2017 09:18

CONSTRUCTION DETAIL

Element	Cd.	Ch.	Description
Style	15		OLD STYLE
Model	03		MULTI-FAMILY
Grade	C+		AVG. (+)
Stories	2.50		2 1/2 STORIES
Foundation	3		MASONRY
Exterior Wall 1	2		CLAPBOARD
Exterior Wall 2			
Roof Structure	1		GABLE
Roof Cover	2		SLATE
Interior Wall 1	2		PLASTER
Interior Wall 2			
Interior Floor 1	3		HARDWOOD
Interior Floor 2			
Heat Fuel	1		OIL
Heat Type	5		STEAM
AC Type	01		NONE
Bedrooms	6		
Full Baths	2		
Half Baths	0		
Extra Fixtures	0		
Total Rooms	12		
Bath Style	A		AVERAGE
Kitchen Style	A		AVERAGE
Kitchens	1		
Extra Kitchens	1		
Frame	1		WOOD
Basement Floor	12		CONCRETE
Bsmt Garage			
Units	3		
WS Flues			
FBM Quality			
Fireplaces	0		

CONSTRUCTION DETAIL (CONTINUED)

Element	Cd.	Ch.	Description
#Heat Sys	2		
Central Vac	0		NO
FBM Sqft			
Int vs Ext	S		SAME

MIXED USE

Code	Description	Percentage
104	TWO FAM	100

COST/MARKET VALUATION

Adj. Base Rate:	69.08
Replace Cost	229,543
AYB	1896
EYB	1972
Dep Code	AV
Remodel Rating	
Year Remodeled	
Dep %	45
Functional Obslnc	
External Obslnc	
Cost Trend Factor	1
Condition	
% Complete	
Overall % Cond	55
Apprais Val	126,200
Dep % Ovr	0
Dep Ovr Comment	
Misc Imp Ovr	0
Misc Imp Ovr Comment	
Cost to Cure Ovr	0
Cost to Cure Ovr Comment	

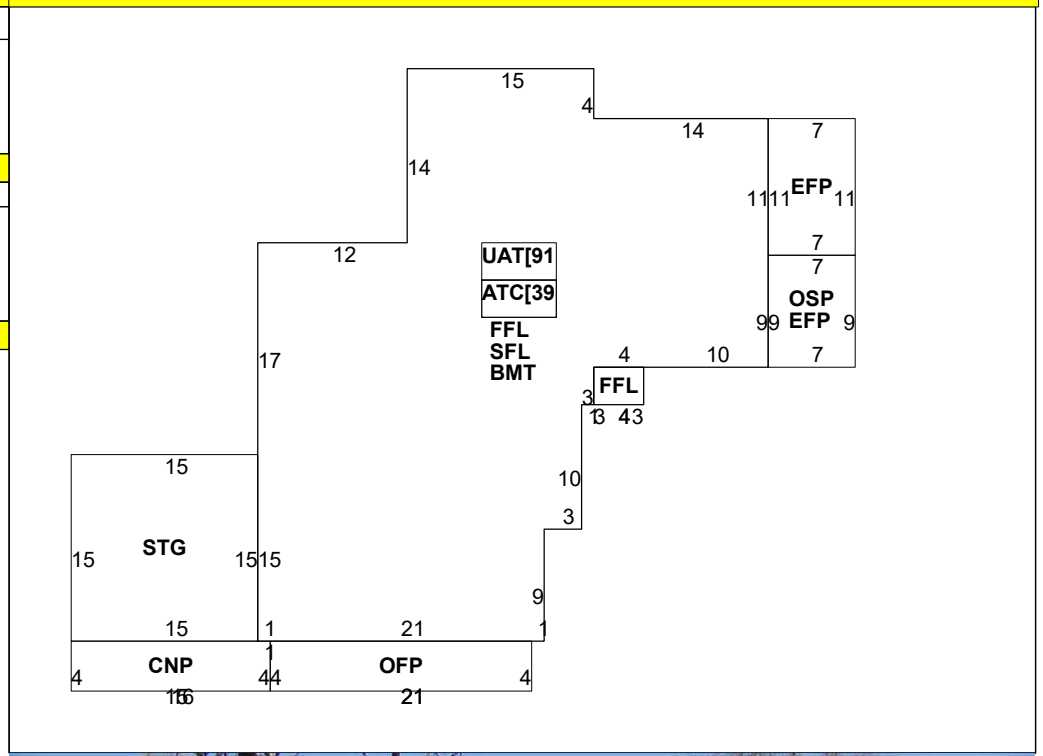

OB-OUTBUILDING & YARD ITEMS(L) / XF-BUILDING EXTRA FEATURES(B)

Code	Description	Sub	Sub Descript	L/B	Units	Unit Price	Yr	Gde	Dp Rt	Cnd	%Cnd	Apr Value
34	BNK BN/L			L	520	20.70	1900	A		FR	50	5,400

BUILDING SUB-AREA SUMMARY SECTION

Code	Description	Living Area	Gross Area	Eff. Area	Unit Cost	Undeprec. Value
ATC	ATTIC	98	392		17.27	6,770
BMT	BASEMENT	0	1,308		13.84	18,098
CNP	CANOPY	0	64		3.24	207
EFP	ENCL PORCH	0	140		20.72	2,901
FFL	1ST FLOOR	1,320	1,320		69.08	91,182
OFP	OPEN PORCH	0	84		6.58	553
OSP	SCRN PORCH	0	63		9.87	622
SFL	2ND FLOOR	1,308	1,308		69.08	90,353
STG	STORAGE	0	225		27.63	6,217
UAT	UNFIN ATTC	0	915		13.82	12,641
	Ttl. Gross Liv/Lease Area:	2,726	5,819	3,323		229,543