Property Location: 71 EVERGREEN DR | MAP ID: 83/ 32/ 13/ / | Bldg Name: | State Use: 101

Vision ID: 5696 | Account # 5778 | Bldg #: 1 of 1 | Sec #: 1 of 1 | Card 1 of 1 | Print Date: 12/16/2017 03:35

CURRENT OWNER	TOPO.	UTILITIES	STRT./ROAD	LOCATION
MCTAGGART KIMBERLY C FLYNN PATRICK D 71 EVERGREEN DR EAST LONGMEADOW, MA 01028 Additional Owners:		1 TYPCL		

SUPPLEMENTAL DATA

Other ID:	Received
SP Permit	Field 7
Chapter Land	Field 8
OC Dates	Field 9
In+Ex FY	Field 10
Mailed	
GIS ID: F_392182_2857567	ASSOC PID#

CURRENT ASSESSMENT

Description	Code	Appraised Value	Assessed Value
RESIDNTL.	101	267,700	267,700
RES LAND	101	111,600	111,600
RESIDNTL.	101	17,200	17,200
	Total	396,500	396,500

1006
4ST LONGMEADOW, M

VISION

RECORD OF OWNERSHIP

	BK-VOL/PAGE	SALE DATE	q/u	v/i	SALE PRICE	V.C.
MCTAGGART KIMBERLY C	18425/ 363	08/20/2010	U	I	100	A
MCTAGGART KIMBERLY,	17532/ 62	11/03/2008	U	I	1	H
MCTAGGART,ROBERT	16197/ 503	09/18/2006	U	I	420,000	
BURG JOHN E + DIANE D,	09994/ 0224	09/15/1997	U	I	220,000	
ELLIS-GOLEMBA VIRGINIA +	8670/ 0205	12/13/1993	U	I	1	A
ELLIS-GOLEMBA VIRGINIA L	08065/ 0266	06/01/1992	U	V	60,000	

PREVIOUS ASSESSMENTS (HISTORY)

Yr.	Code	Assessed Value	Yr.	Code	Assessed Value	Yr.	Code	Assessed Value
2017	101	260,600	2016	101	257,900	2015	101	257,900
2017	101	109,400	2016	101	105,800	2015	101	105,800
2017	101	17,200	2016	101	17,200	2015	101	17,200
	Total:	387,200		Total:	380,900		Total:	380,900

EXEMPTIONS

Year	Type	Description	Amount
		Total:	

OTHER ASSESSMENTS

Code	Description	Number	Amount	Comm. Int.

This signature acknowledges a visit by a Data Collector or Assessor

ASSESSING NEIGHBORHOOD

NBHD/ SUB	NBHD Name	Street Index Name	Tracing	Batch
0001/A			101	NG

NOTES

SUB DIV #659 JACUZZI SHOWER & 2 SINKS
MASTER BATH

APPRAISED VALUE SUMMARY

Appraised Bldg. Value (Card)	267,700
Appraised XF (B) Value (Bldg)	0
Appraised OB (L) Value (Bldg)	17,200
Appraised Land Value (Bldg)	111,600
Special Land Value	0
Total Appraised Parcel Value	396,500
Valuation Method:	C
Adjustment:	0
Net Total Appraised Parcel Value	**396,500**

BUILDING PERMIT RECORD

Permit ID	Issue Date	Type	Description	Amount	Insp. Date	% Comp.	Date Comp.	Comments
362	10/31/2006	11	POOL	33,000		0		OC 5/18/2007
331	09/27/2006	7	REMODEL	45,000		0		EXISTING GARAGE IN
146	06/01/1992	MN	Manual Note	100,000		0		DWELLING

VISIT/ CHANGE HISTORY

Date	Type	IS	ID	Cd.	Purpose/Result
03/15/2007			311	15	PERMIT VISIT
03/15/2007			311	3	MEAS+INSPCTD
10/27/2005			311	3	MEAS+INSPCTD
04/24/2000			247	14	INSPECTED
12/14/1999			247	2	MEASURED

LAND LINE VALUATION SECTION

B #	Use Code	Use Description	Zone	D	Front	Depth	Units		Unit Price	I. Factor	S.A.	Acre Disc	C. Factor	ST. Idx	Adj.	Notes- Adj	Special Pricing Spec Use	Special Pricing Spec Calc	S Adj Fact	Adj. Unit Price	Land Value
1	101	ONE FAM	RA				32,353	SF	2.78	1.2400	8	1.0000	1.00	NG	1.00				1.00	3.45	111,600

Total Card Land Units: 0.74 AC | Parcel Total Land Area: 0.74 AC | Total Land Value: 111,600

Property Location: 71 EVERGREEN DR **MAP ID:** 83/ 32/ 13/ / **Bldg Name:** **State Use:** 101

Vision ID: 5696 **Account #** 5778 **Bldg #:** 1 of 1 **Sec #:** 1 of 1 **Card** 1 of 1 **Print Date:** 12/16/2017 03:35

CONSTRUCTION DETAIL

Element	Cd.	Ch.	Description
Style	06		COLONIAL
Model	01		RESIDENTIAL
Grade	B-		GOOD (-)
Stories	2.00		2 STORY
Foundation	1		CONCRETE
Exterior Wall 1	4		VINYL
Exterior Wall 2			
Roof Structure	1		GABLE
Roof Cover	1		ASPHALT SH
Interior Wall 1	1		DRYWALL
Interior Wall 2			
Interior Floor 1	4		CARPET
Interior Floor 2	3		HARDWOOD
Heat Fuel	2		GAS
Heat Type	1		FORCED H/A
AC Type	03		FULL
Bedrooms	5		
Full Baths	3		
Half Baths	1		
Extra Fixtures	2		
Total Rooms	9		
Bath Style	G		GOOD
Kitchen Style	G		GOOD
Kitchens	1		
Extra Kitchens	0		
Frame	1		WOOD
Basement Floor	12		CONCRETE
Bsmt Garage			
Units	1		
WS Flues			
FBM Quality			
Fireplaces	1		

CONSTRUCTION DETAIL (CONTINUED)

Element	Cd.	Ch.	Description
#Heat Sys	1		
Central Vac	1		YES
FBM Sqft			
Int vs Ext	S		SAME

MIXED USE

Code	Description	Percentage
101	ONE FAM	100

COST/MARKET VALUATION

Adj. Base Rate:	98.04
Replace Cost	314,894
AYB	1992
EYB	2002
Dep Code	GD
Remodel Rating	
Year Remodeled	
Dep %	15
Functional Obslnc	
External Obslnc	
Cost Trend Factor	1
Condition	
% Complete	
Overall % Cond	85
Apprais Val	267,700
Dep % Ovr	0
Dep Ovr Comment	
Misc Imp Ovr	0
Misc Imp Ovr Comment	
Cost to Cure Ovr	0
Cost to Cure Ovr Comment	

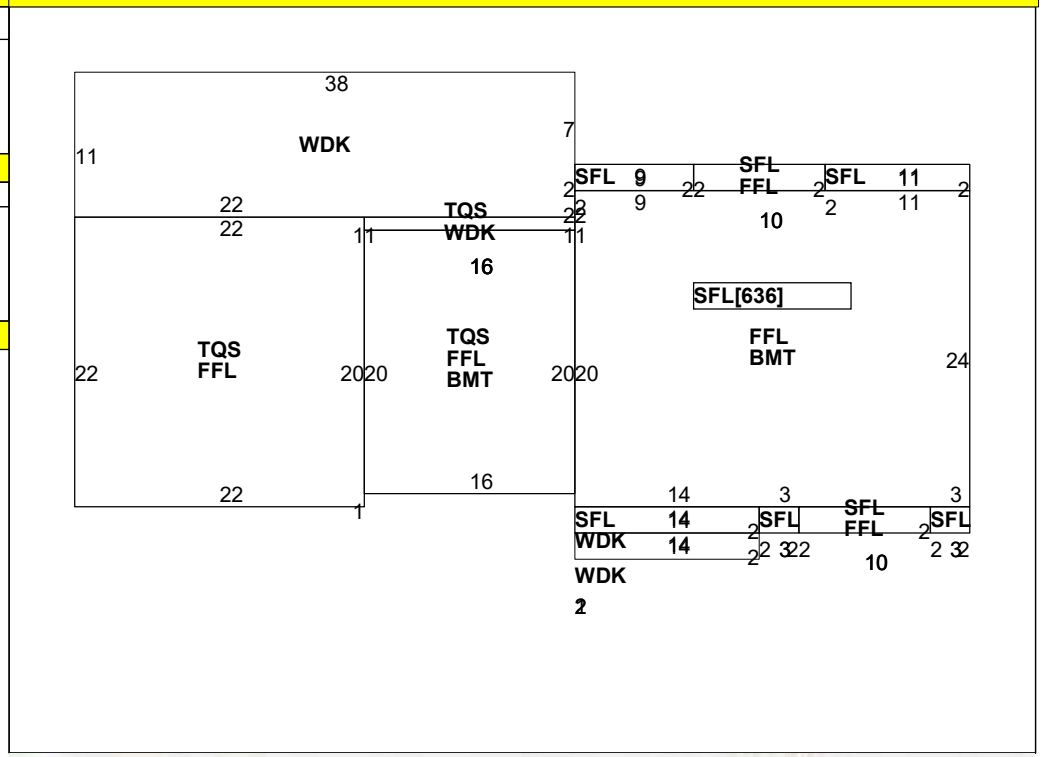

OB-OUTBUILDING & YARD ITEMS(L) / XF-BUILDING EXTRA FEATURES(B)

Code	Description	Sub	Sub Descript	L/B	Units	Unit Price	Yr	Gde	Dp Rt	Cnd	%Cnd	Apr Value
02	SHED/FR			L	240	7.48	2006	A		GD	70	1,300
02	SHED/FR			L	120	7.48	2005	A		GD	70	600
11	POOL I-V	OB	Outbuilding	L	756	29.00	2006	A		GD	70	15,300

BUILDING SUB-AREA SUMMARY SECTION

Code	Description	Living Area	Gross Area	Eff. Area	Unit Cost	Undeprec. Value
BMT	BASEMENT	0	1,040		19.61	20,392
FFL	1ST FLOOR	1,564	1,564		98.04	153,329
SFL	2ND FLOOR	756	756		98.04	74,116
TQS	3/4 STORY	615	820		73.53	60,293
WDK	WOOD DECK	0	490		13.81	6,765
	Ttl. Gross Liv/Lease Area:	2,935	4,670	3,212		314,894