Property Location: 17 ANGELA LN | MAP ID: 89/ 54/ 6/ / | Bldg Name: | State Use: 101

Vision ID: 5972 | Account # 6054 | Bldg #: 1 of 1 | Sec #: 1 of 1 | Card 1 of 1 | Print Date: 12/16/2017 04:41

CURRENT OWNER	TOPO.	UTILITIES	STRT./ROAD	LOCATION
SACENTI RICHARD D LE		1 TYPCL		
SACENTI THOMPSON MARY K LE				
17 ANGELA LN				
EAST LONGMEADOW, MA 01028				
Additional Owners:				

SUPPLEMENTAL DATA

Other ID:	Received
SP Permit	Field 7
Chapter Land	Field 8
OC Dates	Field 9
In+Ex FY	Field 10
Mailed	
GIS ID: F_393709_2848126	ASSOC PID#

CURRENT ASSESSMENT

Description	Code	Appraised Value	Assessed Value
RESIDNTL.	101	245,000	245,000
RES LAND	101	103,000	103,000
RESIDNTL.	101	13,000	13,000
Total		361,000	361,000

1006
4ST LONGMEADOW, M

VISION

RECORD OF OWNERSHIP

	BK-VOL/PAGE	SALE DATE	q/u	v/i	SALE PRICE	V.C.
SACENTI RICHARD D LE	10479/ 288	10/08/1998	U	V	1	A
SACENTI RICHARD D,	08236/ 0484	11/12/1992	U	V	70,000	
FERRIS JAMES M	07468/ 0408	06/04/1990	U	I	1	J
GOODCHILD TIMOTHY H	0/ 0		U		0	

PREVIOUS ASSESSMENTS (HISTORY)

Yr.	Code	Assessed Value	Yr.	Code	Assessed Value	Yr.	Code	Assessed Value
2017	101	238,700	2016	101	236,100	2015	101	236,100
2017	101	101,100	2016	101	97,700	2015	101	97,700
2017	101	13,000	2016	101	13,000	2015	101	13,000
	Total:	352,800		Total:	346,800		Total:	346,800

EXEMPTIONS

Year	Type	Description	Amount
		Total:	

OTHER ASSESSMENTS

Code	Description	Number	Amount	Comm. Int.

This signature acknowledges a visit by a Data Collector or Assessor

ASSESSING NEIGHBORHOOD

NBHD/ SUB	NBHD Name	Street Index Name	Tracing	Batch
0001/A			101	NG

NOTES

SUB DIV #670

APPRAISED VALUE SUMMARY

Appraised Bldg. Value (Card)	245,000
Appraised XF (B) Value (Bldg)	0
Appraised OB (L) Value (Bldg)	13,000
Appraised Land Value (Bldg)	103,000
Special Land Value	0
Total Appraised Parcel Value	361,000
Valuation Method:	C
Adjustment:	0
Net Total Appraised Parcel Value	**361,000**

BUILDING PERMIT RECORD

Permit ID	Issue Date	Type	Description	Amount	Insp. Date	% Comp.	Date Comp.	Comments
178	07/01/1993	MN	Manual Note	10,000		0		POOL I
337	11/01/1992	MN	Manual Note	159,315		0		DWELLING

VISIT/ CHANGE HISTORY

Date	Type	IS	ID	Cd.	Purpose/Result
07/15/2005			274	3	MEAS+INSPCTD
01/10/2000			247	14	INSPECTED
12/01/1999			247	2	MEASURED
04/06/1994			210	3	MEAS+INSPCTD
02/10/1993			131	15	PERMIT VISIT

LAND LINE VALUATION SECTION

B #	Use Code	Use Description	Zone	D	Front	Depth	Units		Unit Price	I. Factor	S.A.	Acre Disc	C. Factor	ST. Idx	Adj.	Notes- Adj	Special Pricing Spec Use	Special Pricing Spec Calc	S Adj Fact	Adj. Unit Price	Land Value
1	101	ONE FAM	RA				38,450	SF	2.40	1.2400	8	1.0000	0.90	NG	1.00	ESM1			1.00	2.68	103,000

Total Card Land Units: 0.88 AC | Parcel Total Land Area: 0.88 AC | Total Land Value: 103,000

Property Location: 17 ANGELA LN **MAP ID:** 89/ 54/ 6/ / **Bldg Name:** **State Use:** 101

Vision ID: 5972 **Account #** 6054 **Bldg #:** 1 of 1 **Sec #:** 1 of 1 **Card** 1 of 1 **Print Date:** 12/16/2017 04:41

CONSTRUCTION DETAIL

Element	Cd.	Ch.	Description
Style	19		RANCH
Model	01		RESIDENTIAL
Grade	C+		AVG. (+)
Stories	1.00		1 STORY
Foundation	1		CONCRETE
Exterior Wall 1	4		VINYL
Exterior Wall 2	8		BRICK VENR
Roof Structure	1		GABLE
Roof Cover	1		ASPHALT SH
Interior Wall 1	1		DRYWALL
Interior Wall 2			
Interior Floor 1	4		CARPET
Interior Floor 2	3		HARDWOOD
Heat Fuel	2		GAS
Heat Type	1		FORCED H/A
AC Type	03		FULL
Bedrooms	3		
Full Baths	2		
Half Baths	1		
Extra Fixtures	0		
Total Rooms	7		
Bath Style	G		GOOD
Kitchen Style	G		GOOD
Kitchens	1		
Extra Kitchens	0		
Frame	1		WOOD
Basement Floor	12		CONCRETE
Bsmt Garage			
Units	1		
WS Flues			
FBM Quality			
Fireplaces	2		

CONSTRUCTION DETAIL (CONTINUED)

Element	Cd.	Ch.	Description
#Heat Sys	1		
Central Vac	1		YES
FBM Sqft			
Int vs Ext	S		SAME

MIXED USE

Code	Description	Percentage
101	ONE FAM	100

COST/MARKET VALUATION

Adj. Base Rate:	91.29
Replace Cost	284,836
AYB	1993
EYB	2003
Dep Code	GD
Remodel Rating	
Year Remodeled	
Dep %	14
Functional Obslnc	
External Obslnc	
Cost Trend Factor	1
Condition	
% Complete	
Overall % Cond	86
Apprais Val	245,000
Dep % Ovr	0
Dep Ovr Comment	
Misc Imp Ovr	0
Misc Imp Ovr Comment	
Cost to Cure Ovr	0
Cost to Cure Ovr Comment	

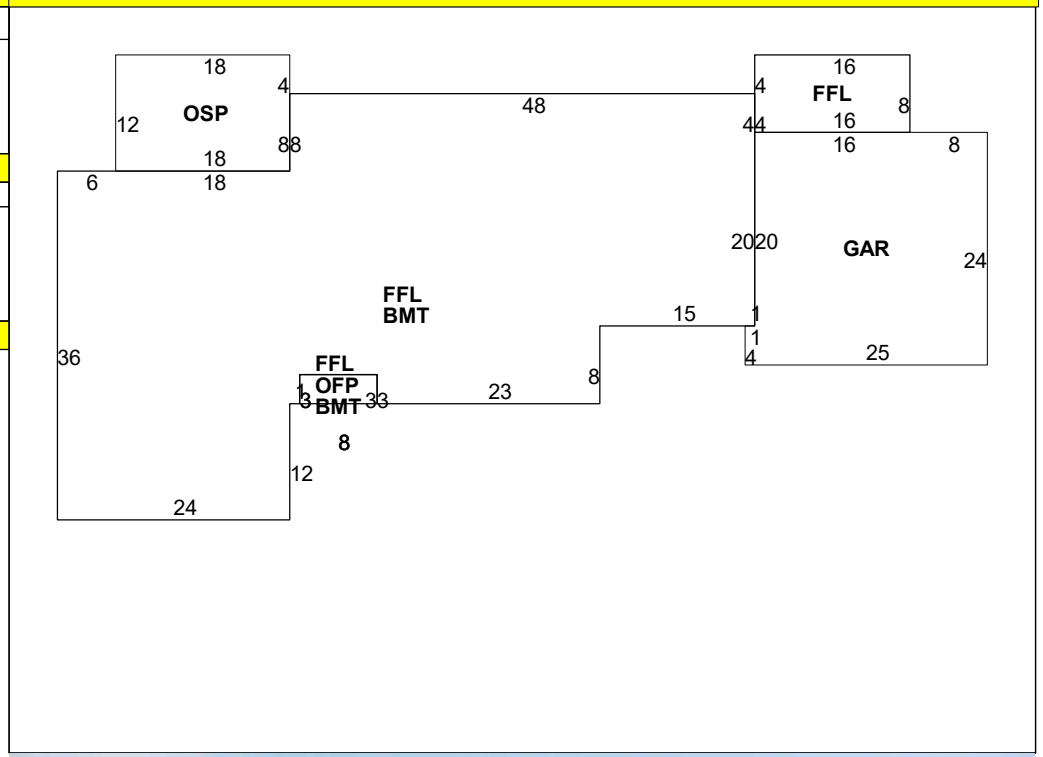

OB-OUTBUILDING & YARD ITEMS(L) / XF-BUILDING EXTRA FEATURES(B)

Code	Description	Sub	Sub Descript	L/B	Units	Unit Price	Yr	Gde	Dp Rt	Cnd	%Cnd	Apr Value
11	POOL I-V	OB	Outbuilding	L	512	29.00	1993	G		GD	70	13,000

BUILDING SUB-AREA SUMMARY SECTION

Code	Description	Living Area	Gross Area	Eff. Area	Unit Cost	Undeprec. Value
BMT	BASEMENT	0	2,272		18.24	41,447
FFL	1ST FLOOR	2,400	2,400		91.29	219,105
GAR	GARAGE	0	580		36.52	21,180
OFP	OPEN PORCH	0	24		7.61	183
OSP	SCRN PORCH	0	216		13.52	2,921
	Ttl. Gross Liv/Lease Area:	2,400	5,492	3,120		284,836