Property Location: 203 WESTWOOD AV | MAP ID: 4/ 55/ 1/ / | Bldg Name: | State Use: 101

Vision ID: 3414 | Account #3469 | Bldg #: 1 of 1 | Sec #: 1 of 1 | Card 1 of 1 | Print Date: 12/07/2018 11:34

CURRENT OWNER	TOPO.	UTILITIES	STRT./ROAD	LOCATION
MANNING MARTIN J MANNING CHRISTINE R 203 WESTWOOD AVE EAST LONGMEADOW, MA 01028 Additional Owners:		1 TYPCL		

SUPPLEMENTAL DATA

Other ID:	Received
SP Permit	Field 7
Chapter Land	Field 8
OC Dates	Field 9
In+Ex FY	Field 10
Mailed	
GIS ID: F_377071_2851182	ASSOC PID#

CURRENT ASSESSMENT

Description	Code	Appraised Value	Assessed Value
RESIDNTL.	101	170,700	170,700
RES LAND	101	81,800	81,800
RESIDNTL.	101	22,500	22,500
	Total	275,000	275,000

1006
4ST LONGMEADOW, M

VISION

RECORD OF OWNERSHIP

	BK-VOL/PAGE	SALE DATE	q/u	v/i	SALE PRICE	V.C.
MANNING MARTIN J	08774/ 0036	03/17/1994	U	I	122,500	
AHLER EUGENE S + LINDA S	07093/ 0135	02/09/1989	U	I	188,500	
GUILD CURTIS	05681/ 0382	09/11/1984	U	I	0	A

PREVIOUS ASSESSMENTS (HISTORY)

Yr.	Code	Assessed Value	Yr.	Code	Assessed Value	Yr.	Code	Assessed Value
2018	101	175,000	2017	101	168,700	2016	101	166,900
2018	101	81,800	2017	101	80,000	2016	101	77,600
2018	101	22,200	2017	101	22,200	2016	101	22,200
	Total:	279,000		Total:	270,900		Total:	266,700

EXEMPTIONS

Year	Type	Description	Amount
		Total:	

OTHER ASSESSMENTS

Code	Description	Number	Amount	Comm. Int.

This signature acknowledges a visit by a Data Collector or Assessor

ASSESSING NEIGHBORHOOD

NBHD/ SUB	NBHD Name	Street Index Name	Tracing	Batch
0001/A			101	MA

NOTES

DB SUB-DIV #429

APPRAISED VALUE SUMMARY

Appraised Bldg. Value (Card)	170,700
Appraised XF (B) Value (Bldg)	0
Appraised OB (L) Value (Bldg)	22,500
Appraised Land Value (Bldg)	81,800
Special Land Value	0
Total Appraised Parcel Value	275,000
Valuation Method:	C
Adjustment:	0
Net Total Appraised Parcel Value	275,000

BUILDING PERMIT RECORD

Permit ID	Issue Date	Type	Description	Amount	Insp. Date	% Comp.	Date Comp.	Comments
269	11/01/2009	10	SHED	2,000		0		20` X 8`
204	06/21/2005	4	ADDITION	5,000		0		OC 8/18/2005
169	06/24/2004	4	ADDITION	27,000		0		FAM RM
81	05/15/1998	9	ALTERATION	2,200		0		98 BP NVC
170	07/08/1996	3	GARAGE	4,000		0		GARAGE
121	05/31/1996	11	POOL	700		0		POOL
255	09/01/1994	MN	Manual Note	5,925		0		RELINE CHY

VISIT/ CHANGE HISTORY

Date	Type	IS	ID	Cd.	Purpose/Result
07/03/2018			333	2	MEASURED
03/23/2018			333	2	MEASURED
01/14/2010			316	15	PERMIT VISIT
12/22/2005			311	2	MEASURED
11/28/2005			311	15	PERMIT VISIT

LAND LINE VALUATION SECTION

B #	Use Code	Use Description	Zone	D	Front	Depth	Units		Unit Price	I. Factor	S.A.	Acre Disc	C. Factor	ST. Idx	Adj.	Notes- Adj	Special Pricing Spec Use	Special Pricing Spec Calc	S Adj Fact	Adj. Unit Price	Land Value
1	101	ONE FAM	RB				34,653	SF	2.62	1.0000	5	1.0000	1.00	MA	1.00			TRF2 .90	.90	2.36	81,800

Total Card Land Units: 0.80 AC | Parcel Total Land Area: 0.8 AC | Total Land Value: 81,800

Property Location: 203 WESTWOOD AV **MAP ID:** 4/ 55/ 1/ / **Bldg Name:** **State Use:** 101

Vision ID: 3414 **Account #**3469 **Bldg #:** 1 of 1 **Sec #:** 1 of 1 **Card** 1 of 1 **Print Date:** 12/07/2018 11:34

CONSTRUCTION DETAIL

Element	Cd.	Ch.	Description
Style	06		COLONIAL
Model	01		RESIDENTIAL
Grade	C		AVERAGE
Stories	2.5		
Foundation	3		MASONRY
Exterior Wall 1	2		CLAPBOARD
Exterior Wall 2			
Roof Structure	1		GABLE
Roof Cover	1		ASPHALT SH
Interior Wall 1	2		PLASTER
Interior Wall 2			
Interior Floor 1	2		SOFTWOOD
Interior Floor 2			
Heat Fuel	1		OIL
Heat Type	1		FORCED H/A
AC Type	03		FULL
Bedrooms	3		
Full Baths	1		
Half Baths	1		
Extra Fixtures	0		
Total Rooms	9		
Bath Style	A		AVERAGE
Kitchen Style	A		AVERAGE
Kitchens	1		
Extra Kitchens	0		
Frame	1		WOOD
Basement Floor	12		CONCRETE
Bsmt Garage			
Units	1		
WS Flues	1		
FBM Quality	0		
Fireplaces	3		

CONSTRUCTION DETAIL (CONTINUED)

Element	Cd.	Ch.	Description
#Heat Sys	1		
Central Vac	0		NO
FBM Sqft	0		
Int vs Ext	S		SAME

MIXED USE

Code	Description	Percentage
101	ONE FAM	100

COST/MARKET VALUATION

Adj. Base Rate:	95.51
Replace Cost	243,926
AYB	1812
EYB	1988
Dep Code	GD
Remodel Rating	04
Year Remodeled	2004
Dep %	30
Functional Obslnc	
External Obslnc	
Cost Trend Factor	1
Condition	
% Complete	
Overall % Cond	70
Apprais Val	170,700
Dep % Ovr	0
Dep Ovr Comment	
Misc Imp Ovr	0
Misc Imp Ovr Comment	
Cost to Cure Ovr	0
Cost to Cure Ovr Comment	

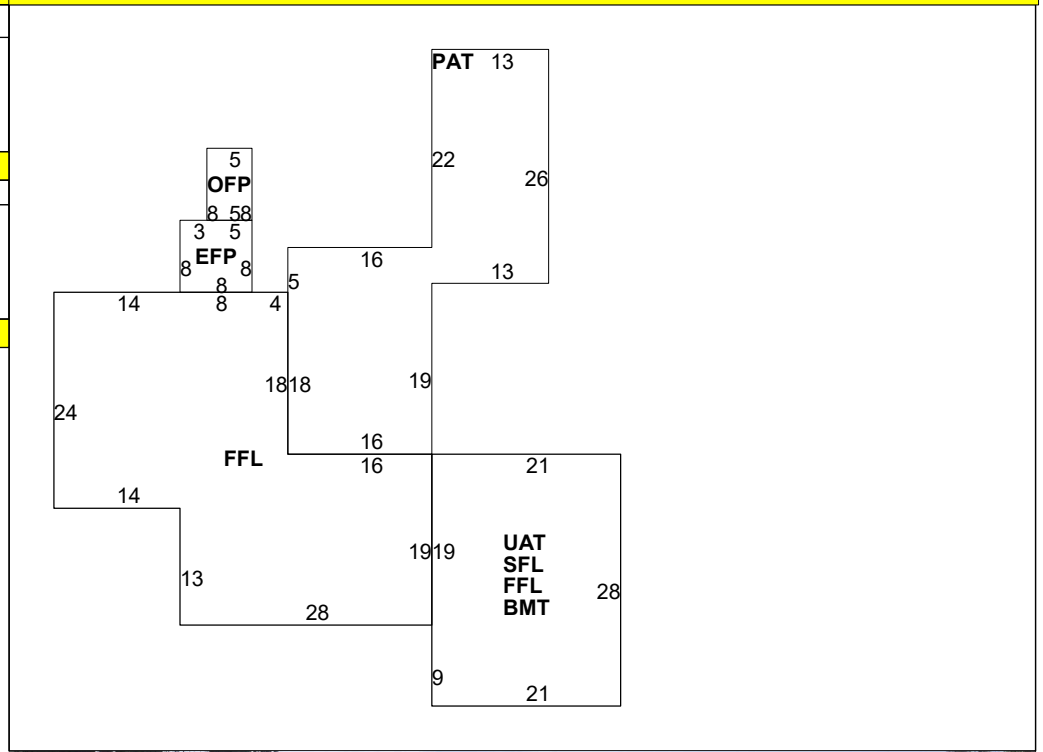

OB-OUTBUILDING & YARD ITEMS(L) / XF-BUILDING EXTRA FEATURES(B)

Code	Description	Sub	Sub Descript	L/B	Units	Unit Price	Yr	Gde	Dp Rt	Cnd	%Cnd	Apr Value
04	GARAGE/L			L	480	30.48	1950	G		VG	85	15,500
02	SHED/FR			L	80	7.48	1996	G		GD	70	500
02	SHED/FR			L	112	7.48	1996	G		GD	70	700
22	WOOD DK			L	464	9.20	1996	G		GD	70	3,700
07	POOL A-C	OB	Outbuilding	L	20	69.00	2003	A		GD	70	1,000
02	SHED/FR			L	160	7.48	2009	A		GD	70	800
02	SHED/FR			L	64	7.48	2015	A		AV	60	300

BUILDING SUB-AREA SUMMARY SECTION
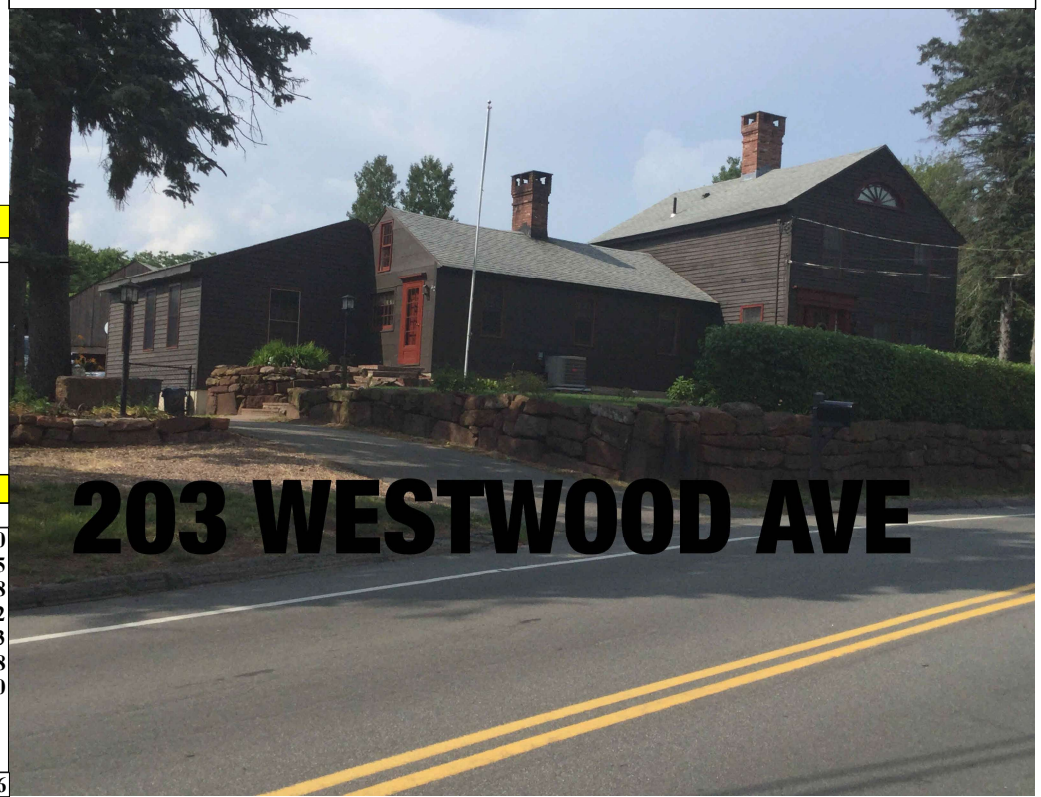
Code	Description	Living Area	Gross Area	Eff. Area	Unit Cost	Undeprec. Value
BMT	BASEMENT	0	588		19.17	11,270
EFP	ENCL PORCH	0	64		28.35	1,815
FFL	1ST FLOOR	1,672	1,672		95.51	159,688
OFP	OPEN PORCH	0	40		9.55	382
PAT	PATIO	0	706		4.73	3,343
SFL	2ND FLOOR	588	588		95.51	56,158
UAT	UNFIN ATTC	0	588		19.17	11,270
	Ttl. Gross Liv/Lease Area:	2,260	4,246	2,554		243,926