Property Location: 7 HIGHMORE CR | MAP ID: 50/ 47/ 21R/ / | Bldg Name: | State Use: 101

Vision ID: 4122 | Account # 4189 | Bldg #: 1 of 1 | Sec #: 1 of 1 | Card 1 of 1 | Print Date: 12/07/2018 14:22

CURRENT OWNER	TOPO.	UTILITIES	STRT./ROAD	LOCATION
GUNN NOAH + MYLAH		1 TYPCL		
7 HIGHMORE CR				
EAST LONGMEADOW, MA 01028				

Additional Owners:

SUPPLEMENTAL DATA

Other ID:	Received
SP Permit	Field 7
Chapter Land	Field 8
OC Dates	Field 9
In+Ex FY	Field 10
Mailed	
GIS ID: F_385679_2849830	ASSOC PID#

CURRENT ASSESSMENT

Description	Code	Appraised Value	Assessed Value
RESIDNTL.	101	557,500	557,500
RES LAND	101	134,300	134,300
RESIDNTL.	101	15,400	15,400
Total		707,200	707,200

1006
4ST LONGMEADOW, M

VISION

RECORD OF OWNERSHIP

	BK-VOL/PAGE	SALE DATE	q/u	v/i	SALE PRICE	V.C.
GUNN NOAH + MYLAH	20632/ 170	03/20/2015	Q	I	675,000	00
KASPER JEANNE	18108/ 225	12/03/2009	U	I	100	A
KASPER,ROBERT J	15078/ 253	06/08/2005	U	V	185,000	P
SEELEY EARLON L JR +,	06078/ 558	05/07/1986	U	V	55,000	
VERATTI	05846/ 0567	07/03/1985	U	I	34,900	

PREVIOUS ASSESSMENTS (HISTORY)

Yr.	Code	Assessed Value	Yr.	Code	Assessed Value	Yr.	Code	Assessed Value
2018	101	573,900	2017	101	547,800	2016	101	541,700
2018	101	134,300	2017	101	144,300	2016	101	139,900
2018	101	15,400	2017	101	15,400	2016	101	15,400
	Total:	723,600		Total:	707,500		Total:	697,000

EXEMPTIONS

Year	Type	Description	Amount
		Total:	

OTHER ASSESSMENTS

Code	Description	Number	Amount	Comm. Int.

This signature acknowledges a visit by a Data Collector or Assessor

ASSESSING NEIGHBORHOOD

NBHD/ SUB	NBHD Name	Street Index Name	Tracing	Batch
0001/A			101	NV

NOTES

SUB DIV 966

APPRAISED VALUE SUMMARY

Appraised Bldg. Value (Card)	557,500
Appraised XF (B) Value (Bldg)	0
Appraised OB (L) Value (Bldg)	15,400
Appraised Land Value (Bldg)	134,300
Special Land Value	0
Total Appraised Parcel Value	707,200
Valuation Method:	C
Adjustment:	0
Net Total Appraised Parcel Value	707,200

BUILDING PERMIT RECORD

Permit ID	Issue Date	Type	Description	Amount	Insp. Date	% Comp.	Date Comp.	Comments
201602927	12/05/2016	7	REMODEL	24,640	04/05/2017	100	04/05/2017	HOME THEATER RM (
201502627	09/30/2015	91	INSULATION	6,567		0		
223	07/01/2005	2	DWELLING	575,000		0		SEE NOTES

VISIT/ CHANGE HISTORY

Date	Type	IS	ID	Cd.	Purpose/Result
04/05/2017			317	15	PERMIT VISIT
05/22/2015			317	3	MEAS+INSPCTD
03/09/2012			317	16	FIELDREV CHG
02/22/2007			311	14	INSPECTED
01/13/2006			311	2	MEASURED

LAND LINE VALUATION SECTION

B #	Use Code	Use Description	Zone	D	Front	Depth	Units		Unit Price	I. Factor	S.A.	Acre Disc	C. Factor	ST. Idx	Adj.	Notes- Adj	Special Pricing Spec Use	Special Pricing Spec Calc	S Adj Fact	Adj. Unit Price	Land Value
1	101	ONE FAM	RAA				40,000	SF	2.32	1.4000	9	1.0000	1.00	NV	1.00				1.00	3.25	130,000
1	101	ONE FAM	RAA				0.61	AC	7,000.00	1.0000	0	1.0000	1.00	NV	1.00				1.00	7,000.00	4,300

Total Card Land Units: 1.53 AC | Parcel Total Land Area: 1.53 AC | Total Land Value: 134,300

Property Location: 7 HIGHMORE CR **MAP ID:** 50/ 47/ 21R/ / **Bldg Name:** **State Use:** 101

Vision ID: 4122 **Account #**4189 **Bldg #:** 1 of 1 **Sec #:** 1 of 1 **Card** 1 of 1 **Print Date:** 12/07/2018 14:22

CONSTRUCTION DETAIL

Element	Cd.	Ch.	Description
Style	06		COLONIAL
Model	01		RESIDENTIAL
Grade	A-		V GOOD-
Stories	2.00		2 STORY
Foundation	1		CONCRETE
Exterior Wall 1	7		BRICK
Exterior Wall 2	4		VINYL
Roof Structure	2		HIP
Roof Cover	1		ASPHALT SH
Interior Wall 1	1		DRYWALL
Interior Wall 2			
Interior Floor 1	3		HARDWOOD
Interior Floor 2			
Heat Fuel	2		GAS
Heat Type	1		FORCED H/A
AC Type	03		FULL
Bedrooms	5		
Full Baths	4		
Half Baths	1		
Extra Fixtures	1		
Total Rooms	11		
Bath Style	G		GOOD
Kitchen Style	G		GOOD
Kitchens	1		
Extra Kitchens	0		
Frame	1		WOOD
Basement Floor	12		CONCRETE
Bsmt Garage			
Units	1		
WS Flues			
FBM Quality	3		
Fireplaces	1		

CONSTRUCTION DETAIL (CONTINUED)

Element	Cd.	Ch.	Description
#Heat Sys	2		
Central Vac	0		NO
FBM Sqft	379		
Int vs Ext	S		SAME

MIXED USE

Code	Description	Percentage
101	ONE FAM	100

COST/MARKET VALUATION

Adj. Base Rate:	103.65
Replace Cost	606,023
AYB	2005
EYB	2010
Dep Code	GD
Remodel Rating	
Year Remodeled	
Dep %	8
Functional Obslnc	
External Obslnc	
Cost Trend Factor	1
Condition	
% Complete	
Overall % Cond	92
Apprais Val	557,500
Dep % Ovr	0
Dep Ovr Comment	
Misc Imp Ovr	0
Misc Imp Ovr Comment	
Cost to Cure Ovr	0
Cost to Cure Ovr Comment	

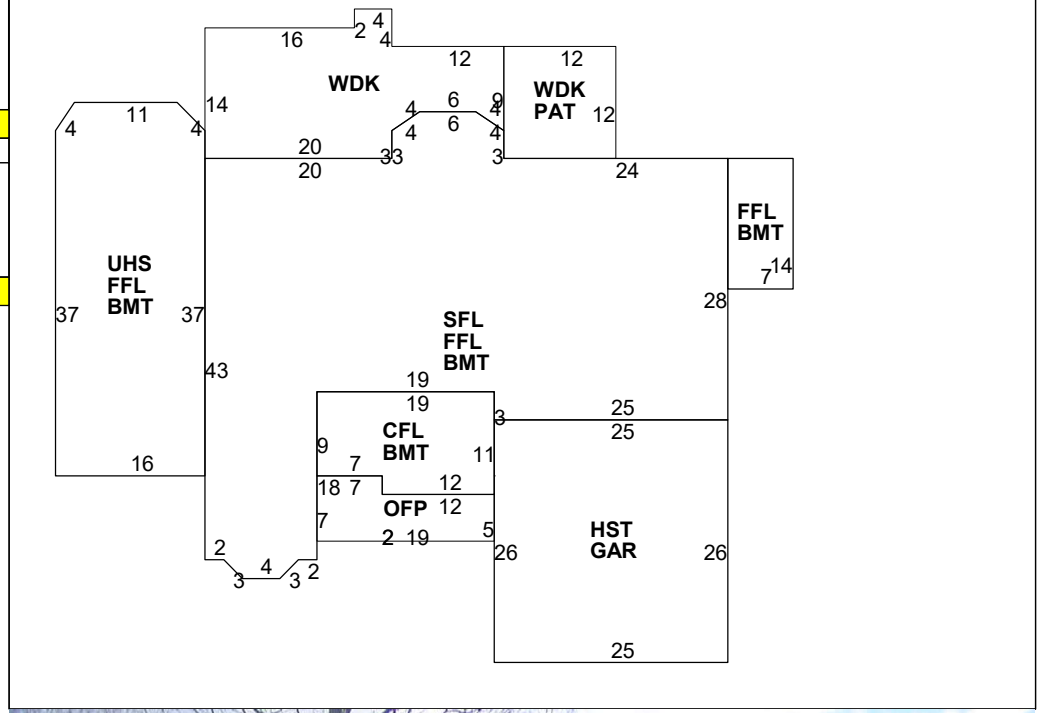

OB-OUTBUILDING & YARD ITEMS(L) / XF-BUILDING EXTRA FEATURES(B)

Code	Description	Sub	Sub Descript	L/B	Units	Unit Price	Yr	Gde	Dp Rt	Cnd	%Cnd	Apr Value
04	GARAGE/L			L	576	30.48	2005	G		GD	70	15,400
GEN	GENERATOR			B	1	0.00	2010	A	1		100	0

BUILDING SUB-AREA SUMMARY SECTION

Code	Description	Living Area	Gross Area	Eff. Area	Unit Cost	Undeprec. Value
BMT	BASEMENT	0	2,682		20.71	55,555
CFL	CATHEDRAL CE	195	195		106.84	20,833
FFL	1ST FLOOR	2,487	2,487		103.65	257,770
GAR	GARAGE	0	650		41.46	26,948
HST	HALF STORY	325	650		51.82	33,685
OFP	OPEN PORCH	0	109		10.46	1,140
PAT	PATIO	0	144		5.04	726
SFL	2ND FLOOR	1,757	1,757		103.65	182,107
UHS	UNFIN HALF STORY	0	632		31.16	19,693
WDK	WOOD DECK	0	522		14.49	7,566
	Ttl. Gross Liv/Lease Area:	4,764	9,828	5,847		606,023