Property Location: 295 ALLEN ST | MAP ID: 85/ 9/ 2/ / | Bldg Name: | State Use: 101

Vision ID: 5801 | Account #5883 | Bldg #: 1 of 1 | Sec #: 1 of 1 | Card 1 of 1 | Print Date: 12/10/2018 12:09

CURRENT OWNER	TOPO.	UTILITIES	STRT./ROAD	LOCATION
ROGERS CHARLES R LE ROGERS MICHAEL P 295 ALLEN ST EAST LONGMEADOW, MA 01028 Additional Owners:		1 TYPCL		

SUPPLEMENTAL DATA

Other ID:	Received
SP Permit	Field 7
Chapter Land	Field 8
OC Dates	Field 9
In+Ex FY	Field 10
Mailed	
GIS ID: F_393016_2854276	*ASSOC PID#*

CURRENT ASSESSMENT

Description	Code	Appraised Value	Assessed Value
RESIDNTL.	101	100,100	100,100
RES LAND	101	84,800	84,800
RESIDNTL.	101	600	600
Total		185,500	185,500

1006
4ST LONGMEADOW, M

VISION

RECORD OF OWNERSHIP

	BK-VOL/PAGE	SALE DATE	q/u	v/i	SALE PRICE	V.C.
ROGERS CHARLES R LE	17703/ 379	03/23/2009	U	I	1	A
ROGERS CHARLES R,	07596/ 0221	11/29/1990	U	I	125,000	
TAJERHA MEHRAN	02464/ 0287	05/01/1956	U	I	0	

PREVIOUS ASSESSMENTS (HISTORY)

Yr.	Code	Assessed Value	Yr.	Code	Assessed Value	Yr.	Code	Assessed Value
2018	101	92,700	2017	101	93,200	2016	101	92,200
2018	101	84,800	2017	101	82,800	2016	101	80,400
2018	101	600	2017	101	600	2016	101	600
	Total:	178,100		*Total:*	176,600		*Total:*	173,200

EXEMPTIONS

Year	Type	Description	Amount
		Total:	

OTHER ASSESSMENTS

Code	Description	Number	Amount	Comm. Int.

This signature acknowledges a visit by a Data Collector or Assessor

ASSESSING NEIGHBORHOOD

NBHD/ SUB	NBHD Name	Street Index Name	Tracing	Batch
0001/A			101	MA

NOTES

3/4 BATH IN BMT

APPRAISED VALUE SUMMARY

Appraised Bldg. Value (Card)	100,100
Appraised XF (B) Value (Bldg)	0
Appraised OB (L) Value (Bldg)	600
Appraised Land Value (Bldg)	84,800
Special Land Value	0
Total Appraised Parcel Value	185,500
Valuation Method:	C
Adjustment:	0
Net Total Appraised Parcel Value	**185,500**

BUILDING PERMIT RECORD

Permit ID	Issue Date	Type	Description	Amount	Insp. Date	% Comp.	Date Comp.	Comments

VISIT/ CHANGE HISTORY

Date	Type	IS	ID	Cd.	Purpose/Result
05/08/2018			333	2	MEASURED
10/06/2005			311	3	MEAS+INSPCTD
09/21/2005			311	1	LEFT NOTICE
01/31/2000			247	14	INSPECTED
12/07/1999			247	2	MEASURED

LAND LINE VALUATION SECTION

B #	Use Code	Use Description	Zone	D	Front	Depth	Units		Unit Price	I. Factor	S.A.	Acre Disc	C. Factor	ST. Idx	Adj.	Notes- Adj	Special Pricing Spec Use	Special Pricing Spec Calc	S Adj Fact	Adj. Unit Price	Land Value
1	101	ONE FAM	RA				40,000	SF	2.32	1.0000	5	1.0000	1.00	MA	1.00			TRF2 .90	.90	2.09	83,600
1	101	ONE FAM	RA				0.17	AC	7,000.00	1.0000	0	1.0000	1.00	MA	1.00				1.00	7,000.00	1,200

Total Card Land Units: 1.09 AC | Parcel Total Land Area: 1.09 AC | Total Land Value: 84,800

Property Location: 295 ALLEN ST **MAP ID:** 85/ 9/ 2/ / **Bldg Name:** **State Use:** 101

Vision ID: 5801 **Account #** 5883 **Bldg #:** 1 of 1 **Sec #:** 1 of 1 **Card** 1 of 1 **Print Date:** 12/10/2018 12:09

CONSTRUCTION DETAIL

Element	Cd.	Ch.	Description
Style	19		RANCH
Model	01		RESIDENTIAL
Grade	C		AVERAGE
Stories	1.00		1 STORY
Foundation	1		CONCRETE
Exterior Wall 1	4		VINYL
Exterior Wall 2	8		BRICK VENR
Roof Structure	1		GABLE
Roof Cover	1		ASPHALT SH
Interior Wall 1	2		PLASTER
Interior Wall 2			
Interior Floor 1	4		CARPET
Interior Floor 2			
Heat Fuel	2		GAS
Heat Type	3		FORCED H/W
AC Type	01		NONE
Bedrooms	3		
Full Baths	2		
Half Baths	0		
Extra Fixtures	0		
Total Rooms	6		
Bath Style	A		AVERAGE
Kitchen Style	A		AVERAGE
Kitchens	1		
Extra Kitchens	0		
Frame	1		WOOD
Basement Floor	12		CONCRETE
Bsmt Garage			
Units	1		
WS Flues			
FBM Quality	1		
Fireplaces	1		

CONSTRUCTION DETAIL (CONTINUED)

Element	Cd.	Ch.	Description
#Heat Sys	1		
Central Vac	0		NO
FBM Sqft	240		
Int vs Ext	S		SAME

MIXED USE

Code	Description	Percentage
101	ONE FAM	100

COST/MARKET VALUATION

Adj. Base Rate:	113.27
Replace Cost	175,682
AYB	1954
EYB	1975
Dep Code	AV
Remodel Rating	
Year Remodeled	
Dep %	43
Functional Obslnc	
External Obslnc	
Cost Trend Factor	1
Condition	
% Complete	
Overall % Cond	57
Apprais Val	100,100
Dep % Ovr	0
Dep Ovr Comment	
Misc Imp Ovr	0
Misc Imp Ovr Comment	
Cost to Cure Ovr	0
Cost to Cure Ovr Comment	

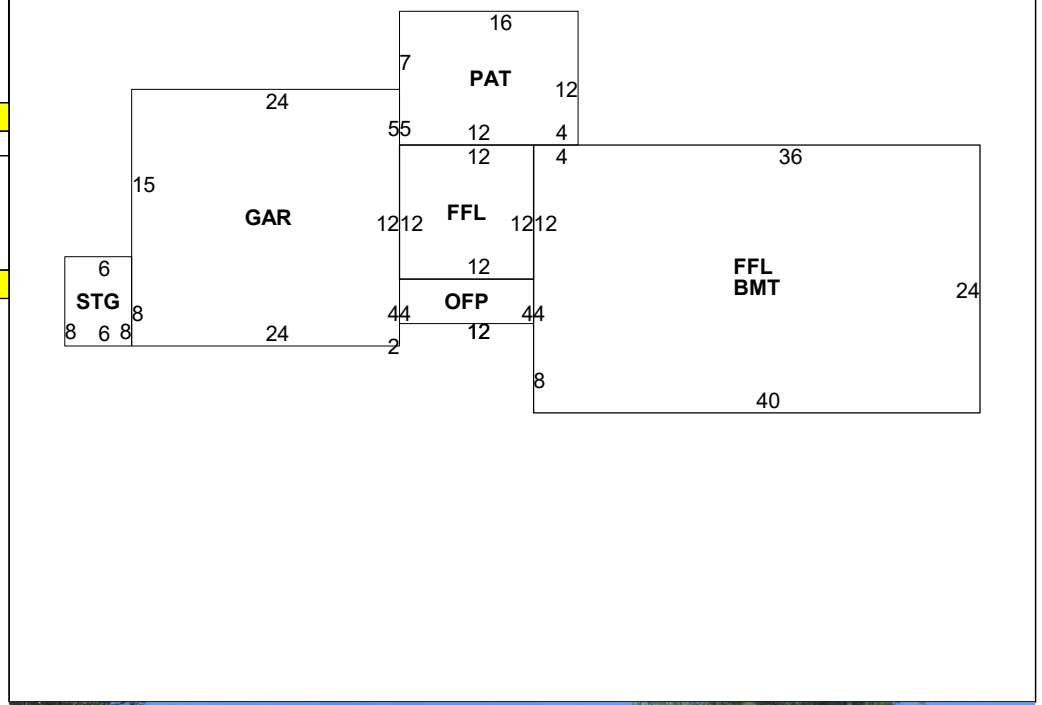

OB-OUTBUILDING & YARD ITEMS(L) / XF-BUILDING EXTRA FEATURES(B)

Code	Description	Sub	Sub Descript	L/B	Units	Unit Price	Yr	Gde	Dp Rt	Cnd	%Cnd	Apr Value
02	SHED/FR			L	140	7.48	1960	A		AV	60	600

BUILDING SUB-AREA SUMMARY SECTION

Code	Description	Living Area	Gross Area	Eff. Area	Unit Cost	Undeprec. Value
BMT	BASEMENT	0	960		22.65	21,748
FFL	1ST FLOOR	1,104	1,104		113.27	125,050
GAR	GARAGE	0	552		45.35	25,033
OFP	OPEN PORCH	0	48		11.80	566
PAT	PATIO	0	192		5.90	1,133
STG	STORAGE	0	48		44.84	2,152
	Ttl. Gross Liv/Lease Area:	1,104	2,904	1,551		175,682