Property Location: 151 WINDHAM DR | MAP ID: 88/ 29/ 40/ / | Bldg Name: | State Use: 101

Vision ID: 5902 | Account #5984 | Bldg #: 1 of 1 | Sec #: 1 of 1 | Card 1 of 1 | Print Date: 12/10/2018 12:34

CURRENT OWNER	TOPO.	UTILITIES	STRT./ROAD	LOCATION
GRAMAROSSA VITO CHILSON SERALIND H 151 WINDHAM DR EAST LONGMEADOW, MA 01028 Additional Owners:				

SUPPLEMENTAL DATA

Other ID:	Received
SP Permit	Field 7
Chapter Land	Field 8
OC Dates	Field 9
In+Ex FY	Field 10
Mailed	
GIS ID: F_393468_2849777	ASSOC PID#

CURRENT ASSESSMENT

Description	Code	Appraised Value	Assessed Value
RESIDNTL.	101	325,200	325,200
RES LAND	101	125,900	125,900
RESIDNTL.	101	2,000	2,000
Total		453,100	453,100

1006
4ST LONGMEADOW, M

VISION

RECORD OF OWNERSHIP

	BK-VOL/PAGE	SALE DATE	q/u	v/i	SALE PRICE	V.C.
GRAMAROSSA VITO	29273/ LC	12/30/1999	U	I	285,900	
CHAPMAN ANDREW B + TERRI S,	LC02-7360	04/29/1996	U	I	272,000	
TORCIA PAULETTE	LC02-6743	12/06/1994	U	V	73,000	
DUTIL A INC	0/ 0		U		0	

PREVIOUS ASSESSMENTS (HISTORY)

Yr.	Code	Assessed Value	Yr.	Code	Assessed Value	Yr.	Code	Assessed Value
2018	101	299,300	2017	101	292,400	2016	101	289,400
2018	101	125,900	2017	101	135,400	2016	101	131,000
2018	101	1,200	2017	101	1,200	2016	101	1,200
	Total:	426,400		Total:	429,000		Total:	421,600

EXEMPTIONS

Year	Type	Description	Amount
		Total:	

OTHER ASSESSMENTS

Code	Description	Number	Amount	Comm. Int.

This signature acknowledges a visit by a Data Collector or Assessor

ASSESSING NEIGHBORHOOD

NBHD/ SUB	NBHD Name	Street Index Name	Tracing	Batch
0001/A			101	NV

NOTES

SUB DIV #545 SHEET METAL PERMIT ISSUED
6/9/11 (201101872)

APPRAISED VALUE SUMMARY

Appraised Bldg. Value (Card)	325,200
Appraised XF (B) Value (Bldg)	0
Appraised OB (L) Value (Bldg)	2,000
Appraised Land Value (Bldg)	125,900
Special Land Value	0
Total Appraised Parcel Value	453,100
Valuation Method:	C
Adjustment:	0
Net Total Appraised Parcel Value	**453,100**

BUILDING PERMIT RECORD

Permit ID	Issue Date	Type	Description	Amount	Insp. Date	% Comp.	Date Comp.	Comments
1	01/01/1995	MN	Manual Note	175,000		0		DWELLING

VISIT/ CHANGE HISTORY

Date	Type	IS	ID	Cd.	Purpose/Result
06/26/2018			333	3	MEAS+INSPCTD
07/15/2005			274	3	MEAS+INSPCTD
01/03/2000			250	22	MAILER SENT
12/01/1999			247	2	MEASURED
04/06/1996			107	3	MEAS+INSPCTD

LAND LINE VALUATION SECTION

B #	Use Code	Use Description	Zone	D	Front	Depth	Units		Unit Price	I. Factor	S.A.	Acre Disc	C. Factor	ST. Idx	Adj.	Notes- Adj	Special Pricing Spec Use	Special Pricing Spec Calc	S Adj Fact	Adj. Unit Price	Land Value
1	101	ONE FAM	RA				31,641	SF	2.84	1.4000	9	1.0000	1.00	NV	1.00				1.00	3.98	125,900

Total Card Land Units: 0.73 AC | Parcel Total Land Area: 0.73 AC | Total Land Value: 125,900

Property Location: 151 WINDHAM DR **MAP ID:** 88/ 29/ 40/ / **Bldg Name:** **State Use:** 101

Vision ID: 5902 **Account #** 5984 **Bldg #:** 1 of 1 **Sec #:** 1 of 1 **Card** 1 of 1 **Print Date:** 12/10/2018 12:34

CONSTRUCTION DETAIL

Element	Cd.	Ch.	Description
Style	06		COLONIAL
Model	01		RESIDENTIAL
Grade	B-		GOOD (-)
Stories	2.00		2 STORY
Foundation	1		CONCRETE
Exterior Wall 1	7		BRICK
Exterior Wall 2	4		VINYL
Roof Structure	2		HIP
Roof Cover	1		ASPHALT SH
Interior Wall 1	1		DRYWALL
Interior Wall 2			
Interior Floor 1	3		HARDWOOD
Interior Floor 2	4		CARPET
Heat Fuel	2		GAS
Heat Type	1		FORCED H/A
AC Type	03		FULL
Bedrooms	4		
Full Baths	2		
Half Baths	1		
Extra Fixtures	4		
Total Rooms	7		
Bath Style	G		GOOD
Kitchen Style	G		GOOD
Kitchens	1		
Extra Kitchens	0		
Frame	1		WOOD
Basement Floor	6		CERAMIC TILE
Bsmt Garage			
Units	1		
WS Flues			
FBM Quality	3		
Fireplaces	1		

CONSTRUCTION DETAIL (CONTINUED)

Element	Cd.	Ch.	Description
#Heat Sys	1		
Central Vac	1		YES
FBM Sqft	1420		
Int vs Ext	S		SAME

MIXED USE

Code	Description	Percentage
101	ONE FAM	100

COST/MARKET VALUATION

Adj. Base Rate:	104.68
Replace Cost	365,349
AYB	1995
EYB	2007
Dep Code	GV
Remodel Rating	
Year Remodeled	
Dep %	11
Functional Obslnc	
External Obslnc	
Cost Trend Factor	1
Condition	
% Complete	
Overall % Cond	89
Apprais Val	325,200
Dep % Ovr	0
Dep Ovr Comment	
Misc Imp Ovr	0
Misc Imp Ovr Comment	
Cost to Cure Ovr	0
Cost to Cure Ovr Comment	

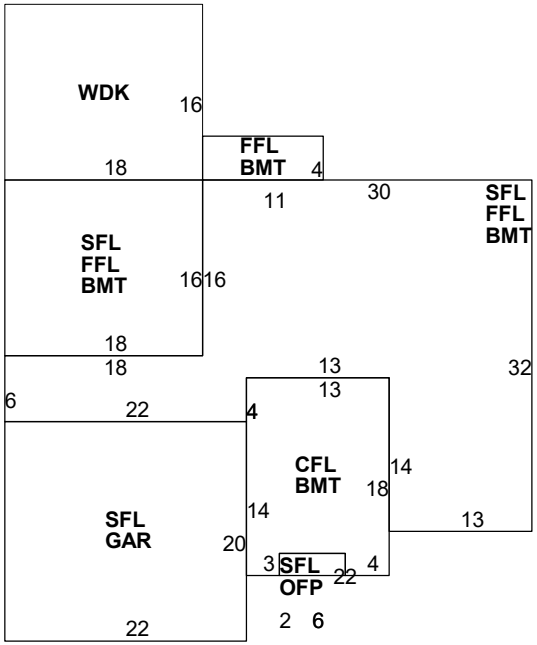

OB-OUTBUILDING & YARD ITEMS(L) / XF-BUILDING EXTRA FEATURES(B)

Code	Description	Sub	Sub Descript	L/B	Units	Unit Price	Yr	Gde	Dp Rt	Cnd	%Cnd	Apr Value
02	SHED/FR			L	130	7.48	2004	G		GD	70	900
02	SHED/FR			L	63	7.48	2004	A		GD	70	300
22	WOOD DK			L	144	9.20	2004	A		AV	60	800

BUILDING SUB-AREA SUMMARY SECTION

Code	Description	Living Area	Gross Area	Eff. Area	Unit Cost	Undeprec. Value
BMT	BASEMENT	0	1,400		20.94	29,312
CFL	CATHEDRAL CE	222	222		107.99	23,973
FFL	1ST FLOOR	1,178	1,178		104.68	123,318
GAR	GARAGE	0	440		41.87	18,424
OFP	OPEN PORCH	0	12		8.72	105
SFL	2ND FLOOR	1,586	1,586		104.68	166,030
WDK	WOOD DECK	0	288		14.54	4,187
	Ttl. Gross Liv/Lease Area:	2,986	5,126	3,490		365,349