Property Location 52 HIGHLANDVIEW AV | Map ID 14A/ 75/ 242/ / | Bldg Name | State Use 101
Vision ID 355 | Account # 363 | Bldg # 1 | Sec # 1 of 1 | Card # 1 of 1 | Print Date 12/18/2019 9:33:27 A

CURRENT OWNER	TOPO TYPE	UTILITY	STREET	LOCATION
PECKHAM TERRY				
PECKHAM PATRICIA	**TOPO WET**	**EASEMENT**	**TRAFFIC**	**CORNER**
52 HIGHLANDVIEW AV	**DRAINAGE**		**VIEW**	**COMMUNITY**
EAST LONGMEADOW MA 01028				

GIS ID F_377660_2853016

SUPPLEMENTAL DATA

Alt Prcl ID	Received
SP Permit	NIA
Chapter Land	Field 8
OC Dates	Field 9
In+Ex FY	Field 10
Mailed	Assoc Pid#

CURRENT ASSESSMENT

Description	Code	Appraised	Assessed
RESIDNTL.	101	262600	262,600
RES LAND	101	85600	85,600
RESIDNTL.	101	1100	1,100
Total		349,300	349,300

1006

EAST LONGMEADOW

RECORD OF OWNERSHIP

	BK-VOL/PAGE		SALE DATE	Q/U	V/I	SALE PRICE	VC
PECKHAM TERRY	21545	0552	01-25-2017	Q	I	338,000	00
LAMBERT BRIAN P	14867	0381	03-09-2005	U	I	310,000	
CARABETTA,MICHAEL	14395	0438	08-04-2004	U	V	80,000	1A
CARABETTA JOSEPH N + NANCY J,	07091	0587	02-07-1989	U	I	1	1A
STELLATO YOLANDA M	04262	0139	05-07-1976	U	I	0	

PREVIOUS ASSESSMENTS (HISTORY)

Year	Code	Assessed	Year	Code	Assessed	Year	Code	Assessed
2019	101	255,700	2018	101	237,200	2017	101	232,600
	101	83,000		101	83,000		101	81,100
	101	1,600		101	3,600		101	2,200
	Total	340300		Total	323800		Total	315900

EXEMPTIONS

Year	Code	Description	Amount
		Total	0.00

OTHER ASSESSMENTS

Code	Description	YEAR	Amount	Comm Int

This signature acknowledges a visit by a Data Collector or Assessor

APPRAISED VALUE SUMMARY

Appraised BLDG. Value (Card)	262,600
Appraised Xf (B) Value (Bldg)	0
Appraised Ob (B) Value (Bldg)	1,100
Appraised Land Value (Bldg)	85,600
Special Land Value	0
Total Appraised Parcel Value	349,300
Valuation Method	C
Adjustment	
Net Total Appraised Parcel Value	349,300

ASSESSING NEIGHBORHOOD

Nbhd	Nbhd Name	B	Tracing	Batch
0001			101	MA

NOTES

BUILDING PERMIT RECORD

Permit Id	Issue Date	Type	Description	Amount	Insp Date	% Comp	Date Comp	Comments
241	08-17-2004	2	DWELLING	120,000				NEAR COMPLETE 1

VISIT / CHANGE HISTORY

Date	Type	Is	Id	Cd	Purpose/Result
06-03-2019			400	15	PERMIT VISIT
07-03-2018			333	3	MEAS+INSPCTD
05-14-2018			333	2	MEASURED
02-24-2017			119	3	MEAS+INSPCTD
03-02-2006			311	3	MEAS+INSPCTD
02-22-2006			250	22	MAILER SENT
12-12-2005			311	15	PERMIT VISIT

LAND LINE VALUATION SECTION

B	Use Co	Description	Zone	D	Fronta	Depth	Land Units		Unit Price	I. Fact	S.A.	Ac Di	C. Fact	St. Idx	Adj	Notes	Special Pricing				Size A	Adj Unit Pric	Land Value
1	101	ONE FAM	RC				12,000	SF	7.13	1.000	5	LAND	1.00	MA	1.00			0			1.000	7.13	85,600
Total Card Land Units							0.275	AC	Parcel Total Land Area:			0.2755									Total Land Value		85,600

Property Location 52 HIGHLANDVIEW AV | Map ID 14A/ 75/ 242/ / | Bldg Name | State Use 101
Vision ID 355 | Account # 363 | Bldg # 1 | Sec # 1 of 1 | Card # 1 of 1 | Print Date 12/18/2019 9:33:28 A

CONSTRUCTION DETAIL

Element	Cd	Description
Style	06	COLONIAL
Model	01	RESIDENTIAL
Grade	C+	AVG. (+)
Stories	2.00	2 STORY
Foundation	1	CONCRETE
Exterior Wall 1	4	VINYL
Exterior Wall 2		
Roof Structure	1	GABLE
Roof Cover	1	ASPHALT SH
Interior Wall 1	1	DRYWALL
Interior Wall 2		
Interior Floor 1	3	HARDWOOD
Interior Floor 2	4	CARPET
Heat Fuel	2	GAS
Heat Type	1	FORCED H/A
AC Type	03	FULL
Bedrooms	4	
Full Baths	2	
Half Baths	1	
Extra Fixtures	1	
Total Rooms	7	
Bath Style	G	GOOD
Half Bath Style	G	GOOD
Kitchens	1	
Kitchen Style	G	GOOD
Extra Kitchens	0	
Extra Kitchen St		
FBM Sqft	660	
FBM Quality	4	
Fireplaces	0	
WS Flues		
Central Vac	0	NO
Frame	1	WOOD

CONSTRUCTION DETAIL (CONTINUED)

Element	Cd	Description
Basement Floor	12	CONCRETE
Bsmt Garage		
#Heat Sys	1.00	
Units	1	

MIXED USE

Code	Description	Percentage
101	ONE FAM	100
		0
		0

COST / MARKET VALUATION

Adj Base Rate	84.18
RCN	285,409
Net Other Adj	
Year Built	2004
Effective Year Built	2010
Depreciation Code	GD
Remodel Rating	
Year Remodeled	
Depreciation %	8
Functional Obsol	
External Obsol	
Cost Trend Factor	1
Condition	
% Complete	
Overall % Condition	92
RCNLD	262,600
Dep % Ovr	
Dep Ovr Comment	
Misc Imp Ovr	
Misc Imp Ovr Comment	
Cost to Cure Ovr	
Cost to Cure Ovr Comment	

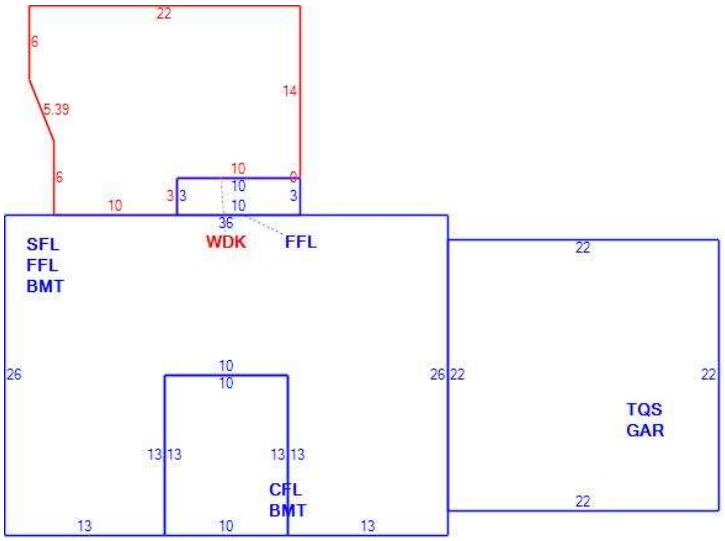

OB - OUTBUILDING & YARD ITEMS(L) / XF - BUILDING EXTRA FEATURES(B)

Code	Description	Su	Sub Type	Lan	Units	Unit Price	Yr Blt	%	Dep.	Cond	Gra	Qual	Apprais Va
19	PATIO			L	324	5.75	2004	60	0.00	AV	A	1.00	1,100

BUILDING SUB-AREA SUMMARY SECTION

Subarea	Description	Living	Gross	Eff Area	Unit Cost	Undeprec Value
BMT	BASEMENT	0	936		22.22	20,799
CFL	CATHEDRAL CE	130	130		114.65	14,904
FFL	1ST FLOOR	836	836		111.23	92,986
GAR	GARAGE	0	484		44.58	21,578
SFL	2ND FLOOR	806	806		111.23	89,649
TQS	3/4 STORY	363	484		83.42	40,375
WDK	WOOD DECK	0	327		15.65	5,116
	Ttl Gross Liv / Lease Area	2,135	4,003	2,566		285,409