Property Location 144 STONEHILL RD | Map ID 63/ 29/ 3/ / | Bldg Name | State Use 101
Vision ID 4851 | Account # 4925 | Bldg # 1 | Sec # 1 of 1 | Card # 1 of 1 | Print Date 12/19/2019 4:17:50 P

CURRENT OWNER	TOPO TYPE	UTILITY	STREET	LOCATION
OCONNOR MARY A				
	TOPO WET	EASEMENT	TRAFFIC	CORNER
144 STONEHILL RD				
	DRAINAGE		VIEW	COMMUNITY
EAST LONGMEADOW MA 01028				

GIS ID F_389539_2848951

SUPPLEMENTAL DATA

Alt Prcl ID	Received
SP Permit	NIA
Chapter Land	Field 8
OC Dates	Field 9
In+Ex FY	Field 10
Mailed	Assoc Pid#

CURRENT ASSESSMENT

Description	Code	Appraised	Assessed
RESIDNTL.	101	263400	263,400
RES LAND	101	134000	134,000
Total		397,400	397,400

1006
EAST LONGMEADOW

RECORD OF OWNERSHIP

	BK-VOL/PAGE		SALE DATE	Q/U	V/I	SALE PRICE	VC
RIVAUX RODOLPHE	22919	557	10-25-2019	Q	I	346,000	00
OCONNOR MARY A	20238	0173	04-02-2014	U	I	135,000	1A
OCONNOR MARY A	08844	0035	05-27-1994	U	V	55,000	
COELHO MANUEL R + GEORGET	08748	0107	02-18-1994	U	V	35,000	1L
EQUITY ONE REAL ESTATE +	06095	0298	05-23-1986	U	I	1	1

PREVIOUS ASSESSMENTS (HISTORY)

Year	Code	Assessed	Year	Code	Assessed	Year	Code	Assessed
2019	101	256,000	2018	101	236,000	2017	101	228,800
	101	130,000		101	130,000		101	140,000
	Total	386000		Total	366000		Total	368800

EXEMPTIONS

Year	Code	Description	Amount
		Total	0.00

OTHER ASSESSMENTS

Code	Description	YEAR	Amount	Comm Int

This signature acknowledges a visit by a Data Collector or Assessor

ASSESSING NEIGHBORHOOD

Nbhd	Nbhd Name	B	Tracing	Batch
0001			101	NV

NOTES

SUB DIV # 574

APPRAISED VALUE SUMMARY

Appraised BLDG. Value (Card)	263,400
Appraised Xf (B) Value (Bldg)	0
Appraised Ob (B) Value (Bldg)	0
Appraised Land Value (Bldg)	134,000
Special Land Value	0
Total Appraised Parcel Value	397,400
Valuation Method	C
Adjustment	
Net Total Appraised Parcel Value	397,400

BUILDING PERMIT RECORD

Permit Id	Issue Date	Type	Description	Amount	Insp Date	% Comp	Date Comp	Comments
80	04-19-2007	20	WOOD STOVE	2,300				PELLET STOVE
88	05-21-1999	17	DECK	3,000				
183	07-01-1994	MN	Manual Note	125,000				DWELLING

VISIT / CHANGE HISTORY

Date	Type	Is	Id	Cd	Purpose/Result
06-25-2018			333	2	MEASURED
12-21-2007			317	15	PERMIT VISIT
06-14-2007			311	3	MEAS+INSPCTD
05-31-2007			311	1	LEFT NOTICE
05-25-2000			247	14	INSPECTED
05-09-2000			247	2	MEASURED
11-09-1999			247	15	PERMIT VISIT

LAND LINE VALUATION SECTION

B	Use Co	Description	Zone	D	Fronta	Depth	Land Units		Unit Price	I. Fact	S.A.	Ac Di	C. Fact	St. Idx	Adj	Notes	Special Pricing				Size A	Adj Unit Pric	Land Value
1	101	ONE FAM	RAA				40,000	SF	2.39	1.400	9	LAND	1.00	NV	1.00			0			1.000	3.35	134,000
1	101	ONE FAM	RAA				0.000	AC	7,000.00	1.000	0		1.00	NV	1.00			0			1.000	7,000.00	0
						Total Card Land Units	0.918	AC	Parcel Total Land Area:			0.9183										Total Land Value	134,000

Property Location 144 STONEHILL RD | Map ID 63/ 29/ 3/ / | Bldg Name | State Use 101
Vision ID 4851 | Account # 4925 | Bldg # 1 | Sec # 1 of 1 | Card # 1 of 1 | Print Date 12/19/2019 4:17:50 P

CONSTRUCTION DETAIL

Element	Cd	Description
Style	05	CAPE
Model	01	RESIDENTIAL
Grade	B	GOOD
Stories	1.75	1 3/4 STORIES
Foundation	1	CONCRETE
Exterior Wall 1	4	VINYL
Exterior Wall 2	8	BRICK VENR
Roof Structure	1	GABLE
Roof Cover	1	ASPHALT SH
Interior Wall 1	1	DRYWALL
Interior Wall 2		
Interior Floor 1	4	CARPET
Interior Floor 2	3	HARDWOOD
Heat Fuel	1	OIL
Heat Type	1	FORCED H/A
AC Type	03	FULL
Bedrooms	4	
Full Baths	2	
Half Baths	0	
Extra Fixtures	0	
Total Rooms	7	
Bath Style	A	AVERAGE
Half Bath Style		
Kitchens	1	
Kitchen Style	A	AVERAGE
Extra Kitchens	0	
Extra Kitchen St		
FBM Sqft		
FBM Quality		
Fireplaces	1	
WS Flues		
Central Vac	0	NO
Frame	1	WOOD

CONSTRUCTION DETAIL (CONTINUED)

Element	Cd	Description
Basement Floor	12	CONCRETE
Bsmt Garage		
#Heat Sys	1.00	
Units	1	

MIXED USE

Code	Description	Percentage
101	ONE FAM	100
		0
		0

COST / MARKET VALUATION

Adj Base Rate	83.16
RCN	306,337
Net Other Adj	
Year Built	1994
Effective Year Built	2004
Depreciation Code	GD
Remodel Rating	
Year Remodeled	
Depreciation %	14
Functional Obsol	
External Obsol	
Cost Trend Factor	1
Condition	
% Complete	
Overall % Condition	86
RCNLD	263,400
Dep % Ovr	
Dep Ovr Comment	
Misc Imp Ovr	
Misc Imp Ovr Comment	
Cost to Cure Ovr	
Cost to Cure Ovr Comment	

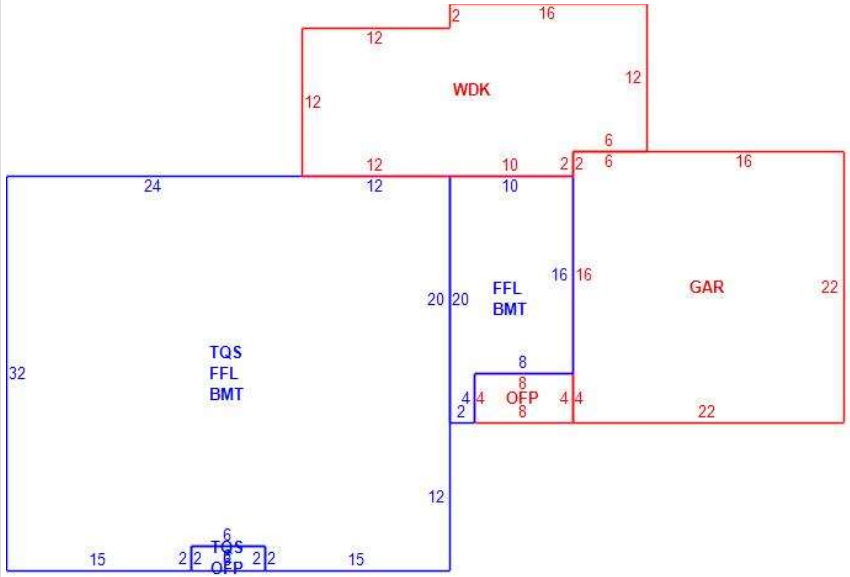

OB - OUTBUILDING & YARD ITEMS(L) / XF - BUILDING EXTRA FEATURES(B)

Code	Description	Su	Sub Type	Lan	Units	Unit Price	Yr Blt	%	Dep.	Cond	Gra	Qual	Apprais Va

BUILDING SUB-AREA SUMMARY SECTION

Subarea	Description	Living	Gross	Eff Area	Unit Cost	Undeprec Value
BMT	BASEMENT	0	1,308		22.88	29,926
FFL	1ST FLOOR	1,308	1,308		114.22	149,399
GAR	GARAGE	0	484		45.78	22,159
OFP	OPEN PORCH	0	44		10.38	457
TQS	3/4 STORY	864	1,152		85.66	98,686
WDK	WOOD DECK	0	356		16.04	5,711
	Ttl Gross Liv / Lease Area	2,172	4,652	2,682		306,337