Property Location 32 STONEHILL RD | Map ID 65/ 35/ 5/ / | Bldg Name | State Use 101
Vision ID 4912 | Account # 4987 | Bldg # 1 | Sec # 1 of 1 | Card # 1 of 1 | Print Date 12/19/2019 4:28:18 P

CURRENT OWNER	TOPO TYPE	UTILITY	STREET	LOCATION
LANDRON KELLY				
	TOPO WET	EASEMENT	TRAFFIC	CORNER
32 STONEHILL RD				
	DRAINAGE		VIEW	COMMUNITY
EAST LONGMEADOW MA 01028				

GIS ID F_389837_2846953

SUPPLEMENTAL DATA

Alt Prcl ID	Received
SP Permit	NIA
Chapter Land	Field 8
OC Dates	Field 9
In+Ex FY	Field 10
Mailed	Assoc Pid#

CURRENT ASSESSMENT

Description	Code	Appraised	Assessed
RESIDNTL.	101	267800	267,800
RES LAND	101	135800	135,800
Total		403,600	403,600

1006

EAST LONGMEADOW

RECORD OF OWNERSHIP

	BK-VOL/PAGE		SALE DATE	Q/U	V/I	SALE PRICE	VC
LANDRON KELLY	37479	LC	08-09-2017	Q	I	434,900	00
WILSON CRAIG F	32797	LC	05-25-2006	U	I	424,900	
ST CLAIR,MICHAEL J	LC-31	0	02-03-2004	U	I	362,000	
LYONS,THOMAS F	LC30	0	03-26-2003	U	I	349,900	
PROCACCINI,PAUL R	LC291	0	09-02-1999	U	I	289,900	

PREVIOUS ASSESSMENTS (HISTORY)

Year	Code	Assessed	Year	Code	Assessed	Year	Code	Assessed
2019	101	260,300	2018	101	238,300	2017	101	231,500
	101	131,800		101	131,800		101	141,800
	Total	392100		Total	370100		Total	373300

EXEMPTIONS

Year	Code	Description	Amount
		Total	0.00

OTHER ASSESSMENTS

Code	Description	YEAR	Amount	Comm Int

This signature acknowledges a visit by a Data Collector or Assessor

ASSESSING NEIGHBORHOOD

Nbhd	Nbhd Name	B	Tracing	Batch
0001			101	NV

NOTES

SUB DIV #533

APPRAISED VALUE SUMMARY

Appraised BLDG. Value (Card)	267,800
Appraised Xf (B) Value (Bldg)	0
Appraised Ob (B) Value (Bldg)	0
Appraised Land Value (Bldg)	135,800
Special Land Value	0
Total Appraised Parcel Value	403,600
Valuation Method	C
Adjustment	
Net Total Appraised Parcel Value	403,600

BUILDING PERMIT RECORD

Permit Id	Issue Date	Type	Description	Amount	Insp Date	% Comp	Date Comp	Comments
4	01-01-1987	MN	Manual Note					SFR

VISIT / CHANGE HISTORY

Date	Type	Is	Id	Cd	Purpose/Result
06-27-2018			333	2	MEASURED
12-14-2007			317	14	INSPECTED
05-24-2007			311	2	MEASURED
05-24-2000			247	14	INSPECTED
05-08-2000			247	2	MEASURED
03-16-1992			170	3	MEAS+INSPCTD
03-23-1988			105	14	INSPECTED

LAND LINE VALUATION SECTION

B	Use Co	Description	Zone	D	Fronta	Depth	Land Units		Unit Price	I. Fact	S.A.	Ac Di	C. Fact	St. Idx	Adj	Notes	Special Pricing				Size A	Adj Unit Pric	Land Value
1	101	ONE FAM	RAA				40,000	SF	2.39	1.400	9	LAND	1.00	NV	1.00			0			1.000	3.35	134,000
1	101	ONE FAM	RAA				0.260	AC	7,000.00	1.000	0		1.00	NV	1.00			0			1.000	7,000.00	1,800
						Total Card Land Units	1.178	AC	Parcel Total Land Area:			1.1783										Total Land Value	135,800

Property Location 32 STONEHILL RD | Map ID 65/ 35/ 5/ / | Bldg Name | State Use 101
Vision ID 4912 | Account # 4987 | Bldg # 1 | Sec # 1 of 1 | Card # 1 of 1 | Print Date 12/19/2019 4:28:18 P

CONSTRUCTION DETAIL

Element	Cd	Description
Style	06	COLONIAL
Model	01	RESIDENTIAL
Grade	B-	GOOD (-)
Stories	2.00	2 STORY
Foundation	1	CONCRETE
Exterior Wall 1	4	VINYL
Exterior Wall 2		
Roof Structure	6	SALTBOX
Roof Cover	1	ASPHALT SH
Interior Wall 1	1	DRYWALL
Interior Wall 2		
Interior Floor 1	4	CARPET
Interior Floor 2	2	SOFTWOOD
Heat Fuel	2	GAS
Heat Type	1	FORCED H/A
AC Type	03	FULL
Bedrooms	3	
Full Baths	2	
Half Baths	1	
Extra Fixtures	0	
Total Rooms	8	
Bath Style	A	AVERAGE
Half Bath Style	A	AVERAGE
Kitchens	1	
Kitchen Style	G	GOOD
Extra Kitchens	0	
Extra Kitchen St		
FBM Sqft		
FBM Quality		
Fireplaces	1	
WS Flues		
Central Vac	1	YES
Frame	1	WOOD

CONSTRUCTION DETAIL (CONTINUED)

Element	Cd	Description
Basement Floor	12	CONCRETE
Bsmt Garage		
#Heat Sys	1.00	
Units	1	

MIXED USE

Code	Description	Percentage
101	ONE FAM	100
		0
		0

COST / MARKET VALUATION

Adj Base Rate	80.14
RCN	326,594
Net Other Adj	
Year Built	1987
Effective Year Built	2000
Depreciation Code	GD
Remodel Rating	
Year Remodeled	
Depreciation %	18
Functional Obsol	
External Obsol	
Cost Trend Factor	1
Condition	
% Complete	
Overall % Condition	82
RCNLD	267,800
Dep % Ovr	
Dep Ovr Comment	
Misc Imp Ovr	
Misc Imp Ovr Comment	
Cost to Cure Ovr	
Cost to Cure Ovr Comment	

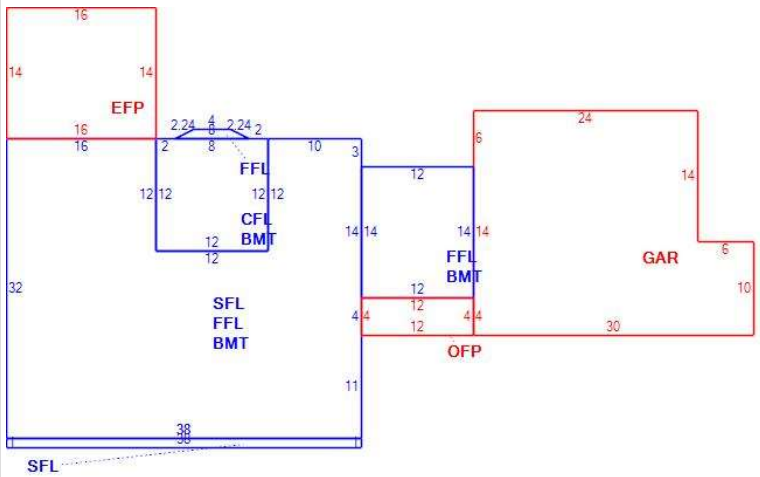

OB - OUTBUILDING & YARD ITEMS(L) / XF - BUILDING EXTRA FEATURES(B)

Code	Description	Su	Sub Type	Lan	Units	Unit Price	Yr Blt	%	Dep.	Cond	Gra	Qual	Apprais Va

BUILDING SUB-AREA SUMMARY SECTION

Subarea	Description	Living	Gross	Eff Area	Unit Cost	Undeprec Value
BMT	BASEMENT	0	1,384		21.04	29,117
CFL	CATHEDRAL CE	144	144		108.04	15,557
EFP	ENCL PORCH	0	224		31.44	7,043
FFL	1ST FLOOR	1,246	1,246		105.12	130,974
GAR	GARAGE	0	636		41.98	26,699
OFP	OPEN PORCH	0	48		10.95	526
SFL	2ND FLOOR	1,110	1,110		105.12	116,678
	Ttl Gross Liv / Lease Area	2,500	4,792	3,107		326,594