Property Location 16 PEACHTREE RD | Map ID 74/ 4/ 12/ / | Bldg Name | State Use 101
Vision ID 5330 | Account # 5407 | Bldg # 1 | Sec # 1 of 1 | Card # 1 of 1 | Print Date 12/19/2019 5:35:03 P

CURRENT OWNER	TOPO TYPE	UTILITY	STREET	LOCATION
CADIGAN JOHN B				
CADIGAN RANDIE C	TOPO WET	EASEMENT	TRAFFIC	CORNER
16 PEACHTREE RD	DRAINAGE		VIEW	COMMUNITY
EAST LONGMEADOW MA 01028				

SUPPLEMENTAL DATA

Alt Prcl ID	Received
SP Permit	NIA
Chapter Land	Field 8
OC Dates 5/3/2016	Field 9
In+Ex FY	Field 10
Mailed	Assoc Pid#

GIS ID F_390476_2851443

CURRENT ASSESSMENT

Description	Code	Appraised	Assessed
RESIDNTL.	101	384800	384,800
RES LAND	101	119500	119,500
Total		504,300	504,300

1006

EAST LONGMEADOW

RECORD OF OWNERSHIP

	BK-VOL/PAGE		SALE DATE	Q/U	V/I	SALE PRICE	VC
CADIGAN JOHN B	21169	0069	05-06-2016	U	I	483,000	1
CABOT REAL ESTATE LLC	14848	0112	02-24-2005	U	V	23,000	1
PODOSKI,ROBERT J II &	09726	0552	12-30-1996	U	V	1	1A
JOHNSON LEONA C	10365	0506	07-14-1988	U	V	1	1A
JOHNSON CHARLOTTE,	05165	0308	09-18-1981	U	V	0	

PREVIOUS ASSESSMENTS (HISTORY)

Year	Code	Assessed	Year	Code	Assessed	Year	Code	Assessed
2019	101	373,900	2018	101	380,100	2017	101	341,600
	101	116,300		101	116,300		101	113,900
	Total	490200		Total	496400		Total	455500

EXEMPTIONS

Year	Code	Description	Amount
		Total	0.00

OTHER ASSESSMENTS

Code	Description	YEAR	Amount	Comm Int

This signature acknowledges a visit by a Data Collector or Assessor

ASSESSING NEIGHBORHOOD

Nbhd	Nbhd Name	B	Tracing	Batch
0001			101	NV

NOTES

SUB DIV 974

APPRAISED VALUE SUMMARY

Appraised BLDG. Value (Card)	384,800
Appraised Xf (B) Value (Bldg)	0
Appraised Ob (B) Value (Bldg)	0
Appraised Land Value (Bldg)	119,500
Special Land Value	0
Total Appraised Parcel Value	504,300
Valuation Method	C
Adjustment	
Net Total Appraised Parcel Value	504,300

BUILDING PERMIT RECORD

Permit Id	Issue Date	Type	Description	Amount	Insp Date	% Comp	Date Comp	Comments
201602131	07-13-2016	4	ADDITION	9,000	04-20-2017	100	04-20-2017	FINISH 2ND FL (AS
257	08-18-2008	2	DWELLING	349,000	05-08-2015	100	05-03-2016	REISSUED 4/22/201

VISIT / CHANGE HISTORY

Date	Type	Is	Id	Cd	Purpose/Result
04-20-2017			317	15	PERMIT VISIT
01-26-2017			317	16	FIELDREV CHG
05-03-2016			400	25	OC VISIT
06-24-2015			317	15	PERMIT VISIT
05-08-2015			317	3	MEAS+INSPCTD
04-22-2014			317	15	PERMIT VISIT
06-07-2013			317	15	PERMIT VISIT

LAND LINE VALUATION SECTION

B	Use Co	Description	Zone	D	Fronta	Depth	Land Units		Unit Price	I. Fact	S.A.	Ac Di	C. Fact	St. Idx	Adj	Notes	Special Pricing				Size A	Adj Unit Pric	Land Value
1	101	ONE FAM	RA				40,000	SF	2.39	1.240	8	LAND	1.00	NG	1.00			0			1.000	2.96	118,400
1	101	ONE FAM	RA				0.150	AC	7,000.00	1.000	0		1.00	NG	1.00			0			1.000	7,000.00	1,100
						Total Card Land Units	1.068	AC	Parcel Total Land Area:	1.0683												Total Land Value	119,500

Property Location 16 PEACHTREE RD | Map ID 74/ 4/ 12/ / | Bldg Name | State Use 101
Vision ID 5330 | Account # 5407 | Bldg # 1 | Sec # 1 of 1 | Card # 1 of 1 | Print Date 12/19/2019 5:35:04 P

CONSTRUCTION DETAIL

Element	Cd	Description
Style	09	CONTEMPORY
Model	01	RESIDENTIAL
Grade	B+	GOOD (+)
Stories	1	
Foundation	1	CONCRETE
Exterior Wall 1	4	VINYL
Exterior Wall 2	8	BRICK VENR
Roof Structure	1	GABLE
Roof Cover	1	ASPHALT SH
Interior Wall 1	1	DRYWALL
Interior Wall 2		
Interior Floor 1	3	HARDWOOD
Interior Floor 2	4	CARPET
Heat Fuel	2	GAS
Heat Type	1	FORCED H/A
AC Type	03	FULL
Bedrooms	3	
Full Baths	2	
Half Baths	1	
Extra Fixtures	1	
Total Rooms	6	
Bath Style	G	GOOD
Half Bath Style	G	GOOD
Kitchens	1	
Kitchen Style	G	GOOD
Extra Kitchens		
Extra Kitchen St		
FBM Sqft		
FBM Quality		
Fireplaces	1	
WS Flues		
Central Vac		
Frame	1	WOOD

CONSTRUCTION DETAIL (CONTINUED)

Element	Cd	Description
Basement Floor	12	CONCRETE
Bsmt Garage		
#Heat Sys	1.00	
Units	1	

MIXED USE

Code	Description	Percentage
101	ONE FAM	100
		0
		0

COST / MARKET VALUATION

Adj Base Rate	66.75
RCN	392,631
Net Other Adj	
Year Built	2014
Effective Year Built	2016
Depreciation Code	GD
Remodel Rating	
Year Remodeled	
Depreciation %	2
Functional Obsol	
External Obsol	
Cost Trend Factor	1
Condition	
% Complete	
Overall % Condition	98
RCNLD	384,800
Dep % Ovr	
Dep Ovr Comment	
Misc Imp Ovr	
Misc Imp Ovr Comment	
Cost to Cure Ovr	
Cost to Cure Ovr Comment	

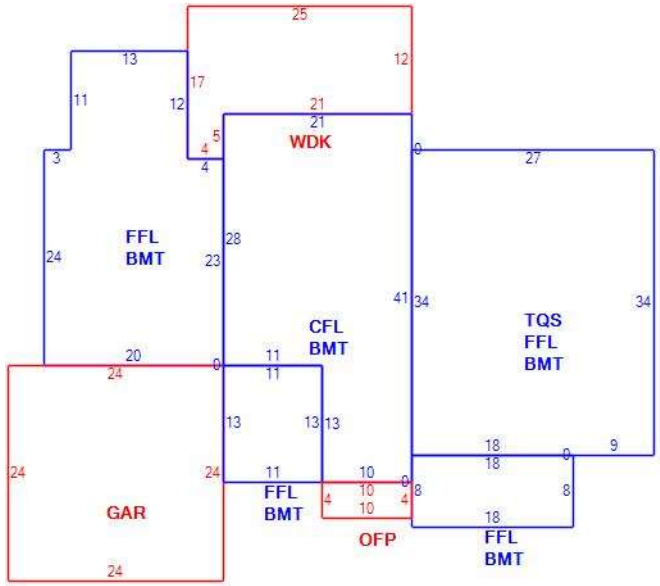

OB - OUTBUILDING & YARD ITEMS(L) / XF - BUILDING EXTRA FEATURES(B)

Code	Description	Su	Sub Type	Lan	Units	Unit Price	Yr Blt	%	Dep.	Cond	Gra	Qual	Apprais Va

BUILDING SUB-AREA SUMMARY SECTION

Subarea	Description	Living	Gross	Eff Area	Unit Cost	Undeprec Value
BMT	BASEMENT	0	2,542		19.42	49,370
CFL	CATHEDRAL CE	718	718		100.16	71,918
FFL	1ST FLOOR	1,824	1,824		97.19	177,267
GAR	GARAGE	0	576		38.81	22,353
OFP	OPEN PORCH	0	40		9.72	389
TQS	3/4 STORY	689	918		72.94	66,961
WDK	WOOD DECK	0	320		13.67	4,373
	Ttl Gross Liv / Lease Area	3,231	6,938	4,040		392,631