Property Location 26 SANFORD ST | Map ID 76/ 33/ 9/ / | Bldg Name | State Use 101
Vision ID 5400 | Account # 5478 | Bldg # 1 | Sec # 1 of 1 | Card # 1 of 1 | Print Date 12/19/2019 5:46:18 P

CURRENT OWNER	TOPO TYPE	UTILITY	STREET	LOCATION
HANNOUCHE JUDITH R				
HANNOUCHE ADEL A	TOPO WET	EASEMENT	TRAFFIC	CORNER
26 SANFORD ST	DRAINAGE		VIEW	COMMUNITY
EAST LONGMEADOW MA 01028				

SUPPLEMENTAL DATA

Alt Prcl ID	Received
SP Permit	NIA
Chapter Land	Field 8
OC Dates	Field 9
In+Ex FY	Field 10
Mailed	Assoc Pid#

GIS ID F_392529_2848391

CURRENT ASSESSMENT

Description	Code	Appraised	Assessed
RESIDNTL.	101	133700	133,700
RES LAND	101	105500	105,500
RESIDNTL.	101	25400	25,400
Total		264,600	264,600

1006
EAST LONGMEADOW

RECORD OF OWNERSHIP

	BK-VOL/PAGE		SALE DATE	Q/U	V/I	SALE PRICE	VC
HANNOUCHE JUDITH R	15405	0196	10-12-2005	U	I	305,000	
FISHER KEVIN ,	12061	0132	12-27-2001	U	I	1	1A
FISHER KEVIN + MANDI,	09795	0074	03-14-1997	U	I	129,000	
AVDOULOS PETER J +	06555	0309	07-13-1987	U	I	147,000	
PAWLIN	05641	0340	06-29-1984	U	I	50	1

PREVIOUS ASSESSMENTS (HISTORY)

Year	Code	Assessed	Year	Code	Assessed	Year	Code	Assessed
2019	101	117,700	2018	101	108,600	2017	101	108,900
	101	102,100		101	102,100		101	100,100
	101	25,400		101	25,400		101	25,400
	Total	245200		Total	236100		Total	234400

EXEMPTIONS

Year	Code	Description	Amount
		Total	0.00

OTHER ASSESSMENTS

Code	Description	YEAR	Amount	Comm Int

This signature acknowledges a visit by a Data Collector or Assessor

ASSESSING NEIGHBORHOOD

Nbhd	Nbhd Name	B	Tracing	Batch
0001			101	MG

NOTES

APPRAISED VALUE SUMMARY

Appraised BLDG. Value (Card)	133,700
Appraised Xf (B) Value (Bldg)	0
Appraised Ob (B) Value (Bldg)	25,400
Appraised Land Value (Bldg)	105,500
Special Land Value	0
Total Appraised Parcel Value	264,600
Valuation Method	C
Adjustment	
Net Total Appraised Parcel Value	264,600

BUILDING PERMIT RECORD

Permit Id	Issue Date	Type	Description	Amount	Insp Date	% Comp	Date Comp	Comments
201202388	06-05-2012	91	INSULATION	1,900				
59	04-24-1998	11	POOL	1,800				

VISIT / CHANGE HISTORY

Date	Type	Is	Id	Cd	Purpose/Result
08-26-2019			334	2	MEASURED
07-20-2012			317	15	PERMIT VISIT
05-18-2006			311	3	MEAS+INSPCTD
12-21-1999			247	3	MEAS+INSPCTD
03-19-1999			200	15	PERMIT VISIT
03-23-1992			131	3	MEAS+INSPCTD
01-29-1981			500	3	MEAS+INSPCTD

LAND LINE VALUATION SECTION

B	Use Co	Description	Zone	D	Fronta	Depth	Land Units		Unit Price	I. Fact	S.A.	Ac Di	C. Fact	St. Idx	Adj	Notes	Special Pricing				Size A	Adj Unit Pric	Land Value
1	101	ONE FAM	RA				20,104	SF	4.41	1.190	7	LAND	1.00	MG	1.00			0			1.000	5.25	105,500
Total Card Land Units							0.462	AC	Parcel Total Land Area:			0.4615									Total Land Value		105,500

Property Location 26 SANFORD ST | Map ID 76/ 33/ 9/ / | Bldg Name | State Use 101
Vision ID 5400 | Account # 5478 | Bldg # 1 | Sec # 1 of 1 | Card # 1 of 1 | Print Date 12/19/2019 5:46:19 P

CONSTRUCTION DETAIL

Element	Cd	Description
Style	19	RANCH
Model	01	RESIDENTIAL
Grade	C	AVERAGE
Stories	1.00	1 STORY
Foundation	1	CONCRETE
Exterior Wall 1	4	VINYL
Exterior Wall 2		
Roof Structure	1	GABLE
Roof Cover	1	ASPHALT SH
Interior Wall 1	2	PLASTER
Interior Wall 2		
Interior Floor 1	4	CARPET
Interior Floor 2	3	HARDWOOD
Heat Fuel	1	OIL
Heat Type	3	FORCED H/W
AC Type	01	NONE
Bedrooms	3	
Full Baths	2	
Half Baths	0	
Extra Fixtures	0	
Total Rooms	7	
Bath Style	A	AVERAGE
Half Bath Style		
Kitchens	1	
Kitchen Style	A	AVERAGE
Extra Kitchens	0	
Extra Kitchen St		
FBM Sqft		
FBM Quality		
Fireplaces	1	
WS Flues		
Central Vac	0	NO
Frame	1	WOOD

CONSTRUCTION DETAIL (CONTINUED)

Element	Cd	Description
Basement Floor	12	CONCRETE
Bsmt Garage		
#Heat Sys	1.00	
Units	1	

MIXED USE

Code	Description	Percentage
101	ONE FAM	100
		0
		0

COST / MARKET VALUATION

Adj Base Rate	89.26
RCN	212,214
Net Other Adj	
Year Built	1949
Effective Year Built	1981
Depreciation Code	AG
Remodel Rating	
Year Remodeled	
Depreciation %	37
Functional Obsol	
External Obsol	
Cost Trend Factor	1
Condition	
% Complete	
Overall % Condition	63
RCNLD	133,700
Dep % Ovr	
Dep Ovr Comment	
Misc Imp Ovr	
Misc Imp Ovr Comment	
Cost to Cure Ovr	
Cost to Cure Ovr Comment	

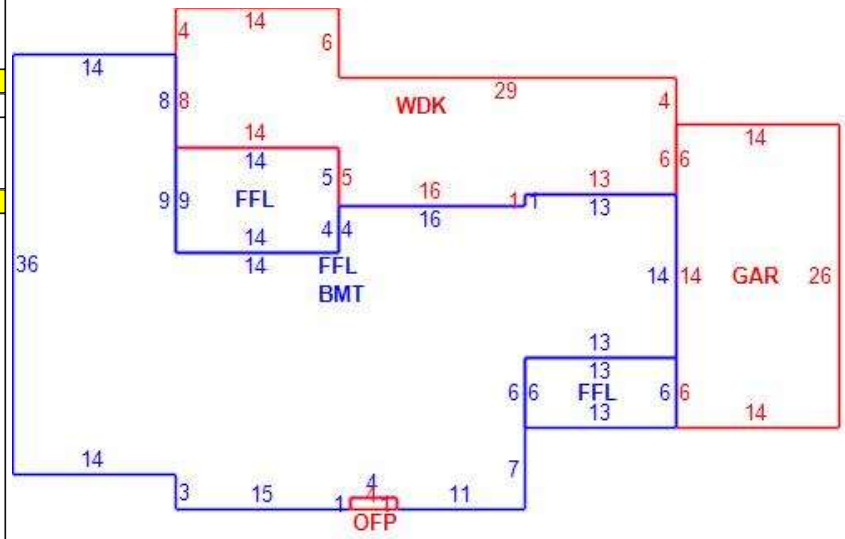

OB - OUTBUILDING & YARD ITEMS(L) / XF - BUILDING EXTRA FEATURES(B)

Code	Description	Su	Sub Type	Lan	Units	Unit Price	Yr Blt	%	Dep.	Cond	Gra	Qual	Apprais Va
11	POOL I-V	OB	Outbuildi	L	968	29.00	1998	70	0.00	GD	G	1.25	24,600
02	SHED/FR			L	120	7.48	2005	70	0.00	GD	G	1.25	800

BUILDING SUB-AREA SUMMARY SECTION

Subarea	Description	Living	Gross	Eff Area	Unit Cost	Undeprec Value
BMT	BASEMENT	0	1,406		20.17	28,356
FFL	1ST FLOOR	1,610	1,610		100.91	162,465
GAR	GARAGE	0	364		40.47	14,733
OFP	OPEN PORCH	0	4		0.00	0
WDK	WOOD DECK	0	474		14.05	6,660
	Ttl Gross Liv / Lease Area	1,610	3,858	2,103		212,214