Property Location 22 KENNETH LUNDEN DR | Map ID 90/ 1/ 43/ / | Bldg Name | State Use 101
Vision ID 5990 | Account # 6073 | Bldg # 1 | Sec # 1 of 1 | Card # 1 of 1 | Print Date 12/19/2019 7:28:35 P

CURRENT OWNER	TOPO TYPE	UTILITY	STREET	LOCATION
BURNEY MARY F TR				
	TOPO WET	EASEMENT	TRAFFIC	CORNER
22 KENNETH LUNDEN DR				
	DRAINAGE		VIEW	COMMUNITY
EAST LONGMEADOW MA 01028				

GIS ID F_392935_2847859

SUPPLEMENTAL DATA

Alt Prcl ID	Received
SP Permit	NIA
Chapter Land	Field 8
OC Dates	Field 9
In+Ex FY	Field 10
Mailed	Assoc Pid#

CURRENT ASSESSMENT

Description	Code	Appraised	Assessed
RESIDNTL.	101	140400	140,400
RES LAND	101	107500	107,500
	Total	247,900	247,900

1006

EAST LONGMEADOW

RECORD OF OWNERSHIP

	BK-VOL/PAGE		SALE DATE	Q/U	V/I	SALE PRICE	VC
BURNEY MARY F TR	08764	0214	03-07-1994	U	I	1	1A
BURNEY JAMES G + MARY F	03279	0154	08-11-1967	U	I	0	

PREVIOUS ASSESSMENTS (HISTORY)

Year	Code	Assessed	Year	Code	Assessed	Year	Code	Assessed
2019	101	136,500	2018	101	126,000	2017	101	128,600
	101	104,400		101	104,400		101	102,400
	Total	240900		Total	230400		Total	231000

EXEMPTIONS

Year	Code	Description	Amount
		Total	0.00

OTHER ASSESSMENTS

Code	Description	YEAR	Amount	Comm Int

This signature acknowledges a visit by a Data Collector or Assessor

ASSESSING NEIGHBORHOOD

Nbhd	Nbhd Name	B	Tracing	Batch
0001			101	MG

NOTES

APPRAISED VALUE SUMMARY

Appraised BLDG. Value (Card)	140,400
Appraised Xf (B) Value (Bldg)	0
Appraised Ob (B) Value (Bldg)	0
Appraised Land Value (Bldg)	107,500
Special Land Value	0
Total Appraised Parcel Value	247,900
Valuation Method	C
Adjustment	
Net Total Appraised Parcel Value	247,900

BUILDING PERMIT RECORD

Permit Id	Issue Date	Type	Description	Amount	Insp Date	% Comp	Date Comp	Comments

VISIT / CHANGE HISTORY

Date	Type	Is	Id	Cd	Purpose/Result
06-27-2018			333	2	MEASURED
07-28-2005			349	3	MEAS+INSPCTD
07-02-2005			274	2	MEASURED
01-11-2000			247	14	INSPECTED
01-03-2000			250	22	MAILER SENT
11-30-1999			247	2	MEASURED
06-29-1992			200	3	MEAS+INSPCTD

LAND LINE VALUATION SECTION

B	Use Co	Description	Zone	D	Fronta	Depth	Land Units		Unit Price	I. Fact	S.A.	Ac Di	C. Fact	St. Idx	Adj	Notes	Special Pricing				Size A	Adj Unit Pric	Land Value
1	101	ONE FAM	RA				25,654	SF	3.52	1.190	7	LAND	1.00	MG	1.00			0			1.000	4.19	107,500
						Total Card Land Units	0.589	AC	Parcel Total Land Area:	0.5889												Total Land Value	107,500

Property Location 22 KENNETH LUNDEN DR | Map ID 90/ 1/ 43/ / | Bldg Name | State Use 101
Vision ID 5990 | Account # 6073 | Bldg # 1 | Sec # 1 of 1 | Card # 1 of 1 | Print Date 12/19/2019 7:28:35 P

CONSTRUCTION DETAIL

Element	Cd	Description
Style	06	COLONIAL
Model	01	RESIDENTIAL
Grade	C	AVERAGE
Stories	2.00	2 STORY
Foundation	1	CONCRETE
Exterior Wall 1	2	CLAPBOARD
Exterior Wall 2		
Roof Structure	1	GABLE
Roof Cover	1	ASPHALT SH
Interior Wall 1	1	DRYWALL
Interior Wall 2		
Interior Floor 1	3	HARDWOOD
Interior Floor 2	4	CARPET
Heat Fuel	2	GAS
Heat Type	3	FORCED H/W
AC Type	01	NONE
Bedrooms	5	
Full Baths	1	
Half Baths	1	
Extra Fixtures	1	
Total Rooms	9	
Bath Style	A	AVERAGE
Half Bath Style	A	AVERAGE
Kitchens	1	
Kitchen Style	A	AVERAGE
Extra Kitchens	0	
Extra Kitchen St		
FBM Sqft	881	
FBM Quality	1	
Fireplaces	1	
WS Flues		
Central Vac	0	NO
Frame	1	WOOD

CONSTRUCTION DETAIL (CONTINUED)

Element	Cd	Description
Basement Floor	4	CARPET
Bsmt Garage		
#Heat Sys	1.00	
Units	1	

MIXED USE

Code	Description	Percentage
101	ONE FAM	100
		0
		0

COST / MARKET VALUATION

Adj Base Rate	84.40
RCN	246,254
Net Other Adj	
Year Built	1965
Effective Year Built	1975
Depreciation Code	AV
Remodel Rating	
Year Remodeled	
Depreciation %	43
Functional Obsol	
External Obsol	
Cost Trend Factor	1
Condition	
% Complete	
Overall % Condition	57
RCNLD	140,400
Dep % Ovr	
Dep Ovr Comment	
Misc Imp Ovr	
Misc Imp Ovr Comment	
Cost to Cure Ovr	
Cost to Cure Ovr Comment	

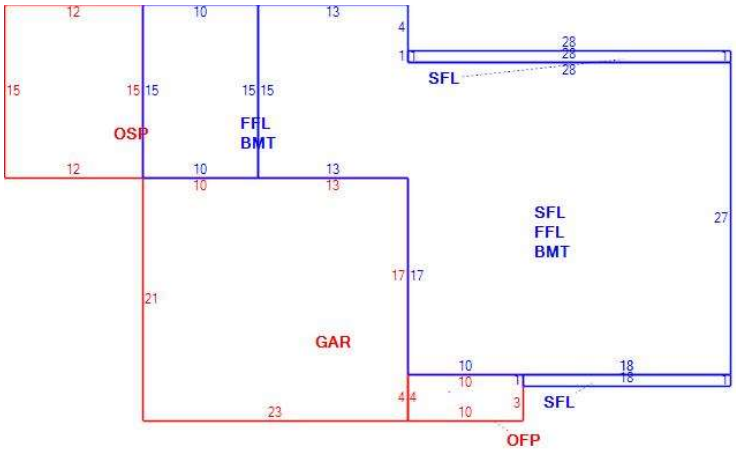

OB - OUTBUILDING & YARD ITEMS(L) / XF - BUILDING EXTRA FEATURES(B)

Code	Description	Su	Sub Type	Lan	Units	Unit Price	Yr Blt	%	Dep.	Cond	Gra	Qual	Apprais Va

BUILDING SUB-AREA SUMMARY SECTION

Subarea	Description	Living	Gross	Eff Area	Unit Cost	Undeprec Value
BMT	BASEMENT	0	1,101		19.36	21,312
FFL	1ST FLOOR	1,101	1,101		96.87	106,658
GAR	GARAGE	0	483		38.71	18,697
OFP	OPEN PORCH	0	40		9.69	387
OSP	SCRN PORCH	0	180		14.53	2,616
SFL	2ND FLOOR	997	997		96.87	96,583
	Ttl Gross Liv / Lease Area	2,098	3,902	2,542		246,254