Property Location 18 NOTTINGHAM DR | Map ID 75/ 51/ 24/ / | Bldg Name | State Use 101
Vision ID 6428 | Account # 6530 | Bldg # 1 | Sec # 1 of 1 | Card # 1 of 1 | Print Date 12/19/2019 8:37:50 P

CURRENT OWNER	TOPO TYPE	UTILITY	STREET	LOCATION
GRYCH MARK A				
GRYCH SUZETTE M	TOPO WET	EASEMENT	TRAFFIC	CORNER
18 NOTTINGHAM DR	DRAINAGE		VIEW	COMMUNITY
EAST LONGMEADOW MA 01028				

GIS ID F_391238_2849866

SUPPLEMENTAL DATA

Alt Prcl ID	Received
SP Permit	NIA
Chapter Land	Field 8
OC Dates	Field 9
In+Ex FY	Field 10
Mailed	Assoc Pid#

CURRENT ASSESSMENT

Description	Code	Appraised	Assessed
RESIDNTL.	101	312500	312,500
RES LAND	101	134100	134,100
RESIDNTL.	101	900	900
Total		447,500	447,500

1006
EAST LONGMEADOW

RECORD OF OWNERSHIP

	BK-VOL/PAGE		SALE DATE	Q/U	V/I	SALE PRICE	VC
GRYCH MARK A	13166	0094	05-05-2003	U	V	95,000	1P
APPLE LAND,DEVELOPMENT INC	11956	0104	10-31-2001	U	V	1	1F
ROLLINS,ROBERT H	11632	0459	05-10-2001	U	V	453,000	1
ROLLINS,ROBERT H	0000	0000		U		0	

PREVIOUS ASSESSMENTS (HISTORY)

Year	Code	Assessed	Year	Code	Assessed	Year	Code	Assessed
2019	101	303,800	2018	101	278,300	2017	101	266,400
	101	130,100		101	130,100		101	140,100
	101	900		101	900		101	900
	Total	434800		Total	409300		Total	407400

EXEMPTIONS

Year	Code	Description	Amount
		Total	0.00

OTHER ASSESSMENTS

Code	Description	YEAR	Amount	Comm Int

This signature acknowledges a visit by a Data Collector or Assessor

APPRAISED VALUE SUMMARY

Appraised BLDG. Value (Card)	312,500
Appraised Xf (B) Value (Bldg)	0
Appraised Ob (B) Value (Bldg)	900
Appraised Land Value (Bldg)	134,100
Special Land Value	0
Total Appraised Parcel Value	447,500
Valuation Method	C
Adjustment	
Net Total Appraised Parcel Value	447,500

ASSESSING NEIGHBORHOOD

Nbhd	Nbhd Name	B	Tracing	Batch
0001			101	NV

NOTES

SUB DIV 875

BUILDING PERMIT RECORD

Permit Id	Issue Date	Type	Description	Amount	Insp Date	% Comp	Date Comp	Comments
201700094	01-04-2017	91	INSULATION	3,033		0		
40	02-23-2005	10	SHED	4,000				
127	05-14-2003	2	DWELLING	210,000				OC 11/14/2003

VISIT / CHANGE HISTORY

Date	Type	Is	Id	Cd	Purpose/Result
06-25-2018			333	3	MEAS+INSPCTD
05-04-2006			105	16	FIELDREV CHG
01-30-2006			311	15	PERMIT VISIT
01-27-2004			296	3	MEAS+INSPCTD

LAND LINE VALUATION SECTION

B	Use Co	Description	Zone	D	Fronta	Depth	Land Units		Unit Price	I. Fact	S.A.	Ac Di	C. Fact	St. Idx	Adj	Notes	Special Pricing				Size A	Adj Unit Pric	Land Value
1	101	ONE FAM	RA				40,000	SF	2.39	1.400	9	LAND	1.00	NV	1.00			0			1.000	3.35	134,000
1	101	ONE FAM	RA				0.010	AC	7,000.00	1.000	0		1.00	NV	1.00			0			1.000	7,000.00	100
						Total Card Land Units	0.928	AC	Parcel Total Land Area:	0.9283												Total Land Value	134,100

Property Location 18 NOTTINGHAM DR | Map ID 75/ 51/ 24/ / | Bldg Name | State Use 101
Vision ID 6428 | Account # 6530 | Bldg # 1 | Sec # 1 of 1 | Card # 1 of 1 | Print Date 12/19/2019 8:37:51 P

CONSTRUCTION DETAIL

Element	Cd	Description
Style	19	RANCH
Model	01	RESIDENTIAL
Grade	B+	GOOD (+)
Stories	1.00	1 STORY
Foundation	1	CONCRETE
Exterior Wall 1	4	VINYL
Exterior Wall 2	8	BRICK VENR
Roof Structure	2	HIP
Roof Cover	1	ASPHALT SH
Interior Wall 1	1	DRYWALL
Interior Wall 2		
Interior Floor 1	3	HARDWOOD
Interior Floor 2	6	CERAMIC TL
Heat Fuel	2	GAS
Heat Type	1	FORCED H/A
AC Type	03	FULL
Bedrooms	3	
Full Baths	2	
Half Baths	0	
Extra Fixtures	2	
Total Rooms	6	
Bath Style	G	GOOD
Half Bath Style		
Kitchens	1	
Kitchen Style	A	AVERAGE
Extra Kitchens	0	
Extra Kitchen St		
FBM Sqft		
FBM Quality		
Fireplaces	1	
WS Flues		
Central Vac	0	NO
Frame	1	WOOD

CONSTRUCTION DETAIL (CONTINUED)

Element	Cd	Description
Basement Floor	12	CONCRETE
Bsmt Garage		
#Heat Sys	1.00	
Units	1	

MIXED USE

Code	Description	Percentage
101	ONE FAM	100
		0
		0

COST / MARKET VALUATION

Adj Base Rate	81.40
RCN	343,416
Net Other Adj	
Year Built	2003
Effective Year Built	2009
Depreciation Code	GD
Remodel Rating	
Year Remodeled	
Depreciation %	9
Functional Obsol	
External Obsol	
Cost Trend Factor	1
Condition	
% Complete	
Overall % Condition	91
RCNLD	312,500
Dep % Ovr	
Dep Ovr Comment	
Misc Imp Ovr	
Misc Imp Ovr Comment	
Cost to Cure Ovr	
Cost to Cure Ovr Comment	

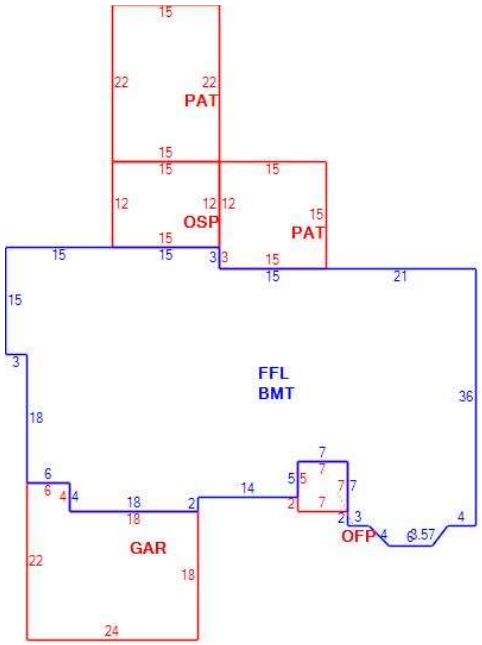

OB - OUTBUILDING & YARD ITEMS(L) / XF - BUILDING EXTRA FEATURES(B)

Code	Description	Su	Sub Type	Lan	Units	Unit Price	Yr Blt	%	Dep.	Cond	Gra	Qual	Apprais Va
02	SHED/FR			L	140	7.48	2005	70	0.00	GD	G	1.25	900

BUILDING SUB-AREA SUMMARY SECTION

Subarea	Description	Living	Gross	Eff Area	Unit Cost	Undeprec Value
BMT	BASEMENT	0	2,227		23.55	52,443
FFL	1ST FLOOR	2,227	2,227		117.85	262,453
GAR	GARAGE	0	456		47.04	21,449
OFP	OPEN PORCH	0	49		12.03	589
OSP	SCRN PORCH	0	180		17.68	3,182
PAT	PATIO	0	555		5.95	3,300
	Ttl Gross Liv / Lease Area	2,227	5,694	2,914		343,416