Property Location 153 GLYNN FARMS DR | Map ID 51/ 58/ 2/ / | Bldg Name | State Use 101
Vision ID 6548 | Account # 6653 | Bldg # 1 | Sec # 1 of 1 | Card # 1 of 1 | Print Date 12/19/2019 8:56:55 P

CURRENT OWNER	TOPO TYPE	UTILITY	STREET	LOCATION
BAXTER MICHAEL L				
BAXTER MARY T	TOPO WET	EASEMENT	TRAFFIC	CORNER
153 GLYNN FARMS DR	DRAINAGE		VIEW	COMMUNITY
EAST LONGMEADOW MA 01028				

GIS ID F_385782_2848898

SUPPLEMENTAL DATA

Alt Prcl ID	Received
SP Permit	NIA
Chapter Land	Field 8
OC Dates	Field 9
In+Ex FY	Field 10
Mailed	Assoc Pid#

CURRENT ASSESSMENT

Description	Code	Appraised	Assessed
RESIDNTL.	101	367000	367,000
RES LAND	101	136000	136,000
RESIDNTL.	101	1500	1,500
Total		504,500	504,500

1006

EAST LONGMEADOW

RECORD OF OWNERSHIP

	BK-VOL/PAGE		SALE DATE	Q/U	V/I	SALE PRICE	VC
BAXTER MICHAEL L	16911	0413	09-06-2007	U	I	604,000	
AC HOMEBUILDING LLC,	16532	0107	02-26-2007	U	V	179,000	
BAKER DAVID R +,	6510	0069	05-28-1987	U	I	1	1A
BAKER DAVID R +,	0000	0000		U		0	

PREVIOUS ASSESSMENTS (HISTORY)

Year	Code	Assessed	Year	Code	Assessed	Year	Code	Assessed
2019	101	357,100	2018	101	350,800	2017	101	336,500
	101	132,000		101	132,000		101	142,000
	101	1,500		101	1,500		101	1,500
	Total	490600		Total	484300		Total	480000

EXEMPTIONS

Year	Code	Description	Amount
		Total	0.00

OTHER ASSESSMENTS

Code	Description	YEAR	Amount	Comm Int

This signature acknowledges a visit by a Data Collector or Assessor

ASSESSING NEIGHBORHOOD

Nbhd	Nbhd Name	B	Tracing	Batch
0001			101	NV

NOTES

SUB DIV 903.

APPRAISED VALUE SUMMARY

Appraised BLDG. Value (Card)	367,000
Appraised Xf (B) Value (Bldg)	0
Appraised Ob (B) Value (Bldg)	1,500
Appraised Land Value (Bldg)	136,000
Special Land Value	0
Total Appraised Parcel Value	504,500
Valuation Method	C
Adjustment	
Net Total Appraised Parcel Value	504,500

BUILDING PERMIT RECORD

Permit Id	Issue Date	Type	Description	Amount	Insp Date	% Comp	Date Comp	Comments
380	12-06-2007	10	SHED	5,100				12` X 24`
42	03-19-2007	2	DWELLING	396,000				OC 8/28/2007

VISIT / CHANGE HISTORY

Date	Type	Is	Id	Cd	Purpose/Result
07-02-2018			333	3	MEAS+INSPCTD
04-20-2010			316	2	MEASURED
08-07-2009			375	1	LEFT NOTICE
01-25-2008			317	15	PERMIT VISIT
01-25-2008			317	15	PERMIT VISIT
01-25-2008			317	3	MEAS+INSPCTD
01-14-2008			250	P1	PHONE MESSAG

LAND LINE VALUATION SECTION

B	Use Co	Description	Zone	D	Fronta	Depth	Land Units		Unit Price	I. Fact	S.A.	Ac Di	C. Fact	St. Idx	Adj	Notes	Special Pricing				Size A	Adj Unit Pric	Land Value
1	101	ONE FAM	RAA				40,000	SF	2.39	1.400	9	LAND	1.00	NV	1.00			0			1.000	3.35	134,000
1	101	ONE FAM	RAA				0.280	AC	7,000.00	1.000	0		1.00	NV	1.00			0			1.000	7,000.00	2,000
						Total Card Land Units	1.198	AC	Parcel Total Land Area:	1.1983												Total Land Value	136,000

Property Location 153 GLYNN FARMS DR | Map ID 51/ 58/ 2/ / | Bldg Name | State Use 101
Vision ID 6548 | Account # 6653 | Bldg # 1 | Sec # 1 of 1 | Card # 1 of 1 | Print Date 12/19/2019 8:56:55 P

CONSTRUCTION DETAIL

Element	Cd	Description
Style	06	COLONIAL
Model	01	RESIDENTIAL
Grade	B	GOOD
Stories	2.00	2 STORY
Foundation	1	CONCRETE
Exterior Wall 1	4	VINYL
Exterior Wall 2	16	STONE VENR
Roof Structure	1	GABLE
Roof Cover	1	ASPHALT SH
Interior Wall 1	1	DRYWALL
Interior Wall 2		
Interior Floor 1	4	CARPET
Interior Floor 2	3	HARDWOOD
Heat Fuel	2	GAS
Heat Type	1	FORCED H/A
AC Type	03	FULL
Bedrooms	5	
Full Baths	3	
Half Baths	1	
Extra Fixtures	3	
Total Rooms	8	
Bath Style	G	GOOD
Half Bath Style	G	GOOD
Kitchens	1	
Kitchen Style	G	GOOD
Extra Kitchens	0	
Extra Kitchen St		
FBM Sqft		
FBM Quality		
Fireplaces	1	
WS Flues		
Central Vac	0	NO
Frame	1	WOOD

CONSTRUCTION DETAIL (CONTINUED)

Element	Cd	Description
Basement Floor	12	CONCRETE
Bsmt Garage		
#Heat Sys	1.00	
Units	1	

MIXED USE

Code	Description	Percentage
101	ONE FAM	100
		0
		0

COST / MARKET VALUATION

Adj Base Rate	71.41
RCN	390,454
Net Other Adj	
Year Built	2007
Effective Year Built	2012
Depreciation Code	GD
Remodel Rating	
Year Remodeled	
Depreciation %	6
Functional Obsol	
External Obsol	
Cost Trend Factor	1
Condition	
% Complete	
Overall % Condition	94
RCNLD	367,000
Dep % Ovr	
Dep Ovr Comment	
Misc Imp Ovr	
Misc Imp Ovr Comment	
Cost to Cure Ovr	
Cost to Cure Ovr Comment	

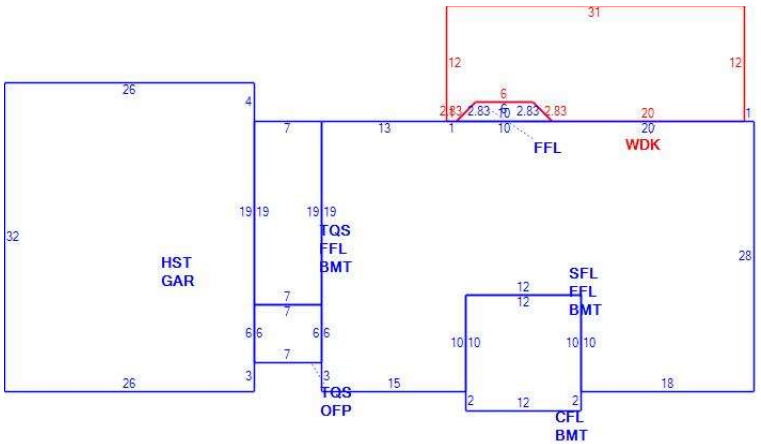

OB - OUTBUILDING & YARD ITEMS(L) / XF - BUILDING EXTRA FEATURES(B)

Code	Description	Su	Sub Type	Lan	Units	Unit Price	Yr Blt	%	Dep.	Cond	Gra	Qual	Apprais Va
02	SHED/FR			L	288	7.48	2007	70	0.00	GD	A	1.00	1,500

BUILDING SUB-AREA SUMMARY SECTION

Subarea	Description	Living	Gross	Eff Area	Unit Cost	Undeprec Value
BMT	BASEMENT	0	1,417		20.55	29,125
CFL	CATHEDRAL CE	144	144		105.77	15,231
FFL	1ST FLOOR	1,289	1,289		102.91	132,656
GAR	GARAGE	0	832		41.19	34,270
HST	HALF STORY	416	832		51.46	42,812
OFP	OPEN PORCH	0	42		9.80	412
SFL	2ND FLOOR	1,140	1,140		102.91	117,321
TQS	3/4 STORY	131	175		77.04	13,482
WDK	WOOD DECK	0	356		14.45	5,146
	Ttl Gross Liv / Lease Area	3,120	6,227	3,794		390,454