Property Location 38 BLUEGRASS DR | Map ID 7/ 5/ 2/11/ / | Bldg Name | State Use 102
Vision ID 6781 | Account # 6901 | Bldg # 1 | Sec # 1 of 1 | Card # 1 of 1 | Print Date 12/20/2019 8:26:12 A

CURRENT OWNER	TOPO	UTILITIES	STRT / ROAD	LOCATION
LONG MICHAEL F		1 TYPCL		
LONG DONNA M				
38 BLUEGRASS DR				
EAST LONGMEADOW MA 01028				

SUPPLEMENTAL DATA

Alt Prcl ID		Received	
SP Permit		NIA	
Chapter La		Field 8	
OC Dates		Field 9	
In+Ex FY		Field 10	
Mailed			
GIS ID	F_376625_2845743	Assoc Pid#	

CURRENT ASSESSMENT

Description	Code	Assessed	Assessed
RESIDNTL.	102	445,300	445,300
	Total	445,300	445,300

1006
EAST LONGMEADOW, MA

VISION

RECORD OF OWNERSHIP

	BK-VOL/PAGE		SALE DATE	Q/U	V/I	SALE PRICE	VC
LONG MICHAEL F	18428	0563	08-25-2010	U	I	432,300	
D R CHESTNUT LLC,	16302	0279	11-02-2006	U	I	3,562,500	1
RUGBY PROPERTIES LLC,	0000	0000		U		0	

PREVIOUS ASSESSMENTS (HISTORY)

Year	Code	Assessed	Year	Code	Assessed V	Year	Code	Assessed
2019	102	455,600	2018	102	460,300	2017	102	447,600
	Total	455600		Total	460300		Total	447600

EXEMPTIONS

Year	Code	Description	Amount
		Total	0.00

OTHER ASSESSMENTS

Code	Description	Number	Amount	Comm Int

This signature acknowledges a visit by a Data Collector or Assessor

APPRAISED VALUE SUMMARY

Appraised Bldg. Value (Card)	445,300
Appraised Xf (B) Value (Bldg)	0
Appraised Ob (B) Value (Bldg)	0
Appraised Land Value (Bldg)	0
Special Land Value	0
Total Appraised Parcel Value	445,300
Valuation Method	C
Total Appraised Parcel Value	445,300

ASSESSING NEIGHBORHOOD

Nbhd	Nbhd Name	B	Tracing	Batch
0001			102	FC

NOTES

BUILDING PERMIT RECORD

Permit Id	Issue Date	Type	Description	Amount	Insp Date	% Comp	Date Comp	Comments
134	05-20-2010	49	CONDO R	350,000				OC 8/19/2010 46` X 72` TWO

VISIT / CHANGE HISTORY

Date	Id	Type	Is	Cd	Purpose/Result
08-19-2010	400			25	OC VISIT

LAND LINE VALUATION SECTION

B	Use Code	Description	Zone	Land Type	Land Units		Unit Price	Size Adj	Site Index	Cond.	Nbhd.	Nbhd. Adj	Notes	Location Adjustment		Adj Unit P	Land Value
1	102	CONDO	PAR	SITE	0	SF	0.00	1.00000		1.00	FC	1.000			0.0000	0.00	0
				Total Card Land Units	0	SF	Parcel Total Land Area			0.0000					Total Land Value		0

Property Location 38 BLUEGRASS DR | Map ID 7/ 5/ 2/11/ / | Bldg Name | State Use 102
Vision ID 6781 | Account # 6901 | Bldg # 1 | Sec # 1 of 1 | Card # 1 of 1 | Print Date 12/20/2019 8:26:13 A

CONSTRUCTION DETAIL

Element	Cd	Description
Style	08	CONDO-TNHS
Model	05	RES CONDO
Grade	C+	AVG. (+)
Stories	2.00	2 Story
Foundation	1	CONCRETE
Interior Wall 1	1	DRYWALL
Interior Wall 2		
Interior Floor 1	3	HARDWOOD
Interior Floor 2	6	CERAMIC TL
Heat Fuel	2	GAS
Heat Type	1	FORCED H/A
AC Type	03	FULL
Bedrooms	2	
Full Baths	2	
Half Baths	1	
Extra Fixtures	1	
Total Rooms	7	
Bath Style	G	GOOD
Num Kitchens	1	
Kitchen Style	G	GOOD
FBM Sqft		
FBM Quality		
Fireplaces	0	
WS Flues		
Central Vac		
Frame	1	WOOD
Bsmt Floor	12	CONCRETE
Bsmt Garage	0	
#Heat Sys	100	
Occupancy	1	
Int Vs Ext	S	

CONSTRUCTION DETAIL (CONTINUED)

Element	Cd	Description

CONDO DATA

Parcel Id	5049	C	0010	Owne	
	CHESTNUT	B	1	S	1

Adjust Type	Code	Description	Factor%
Unit Type C			
Unit Locatio	D	DETACHED	

COST / MARKET VALUATION

Adj Base Rate	103.84
Building Value New	463,829
Year Built	2010
Effective Year Built	2014
Depreciation Code	GD
Remodel Rating	
Year Remodeled	
Depreciation %	4
Functional Obsol	
External Obsol	
Trend Factor	1
Condition	
Condition %	
Percent Good	96
Cns Sect Rcnld	445,300
Dep % Ovr	
Dep Ovr Comment	
Misc Imp Ovr	
Misc Imp Ovr Comment	
Cost to Cure Ovr	
Cost to Cure Ovr Comment	

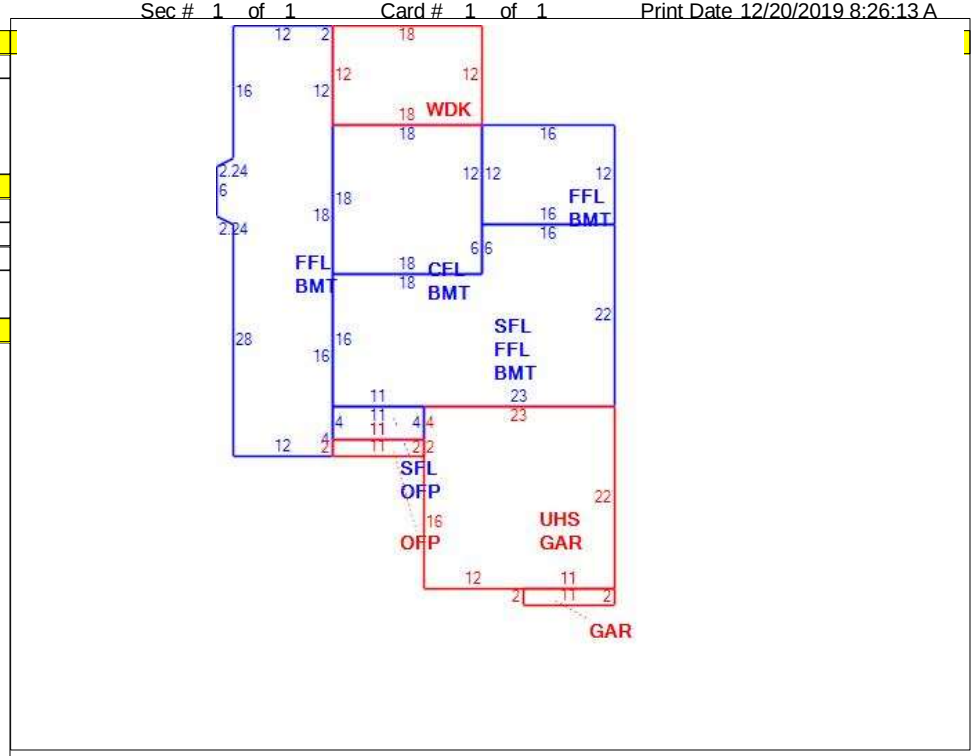

OB - OUTBUILDING & YARD ITEMS(L) / XF - BUILDING EXTRA FEATURES(B)

Code	Description	L/B	Units	Unit Price	Yr Blt	Cond. Cd	% Gd	Grade	Grade Adj.	Appr. Value

BUILDING SUB-AREA SUMMARY SECTION

Code	Description	Living Area	Floor Area	Eff Area	Unit Cost	Undeprec Value
BMT	BASEMENT	0	1,794		28.59	51,283
CFL	CATHEDRAL CE	324	324		147.26	47,711
FFL	1ST FLOOR	1,470	1,470		142.85	209,987
GAR	GARAGE	0	528		57.09	30,141
OFP	OPEN PORCH	0	66		15.15	1,000
SFL	2ND FLOOR	684	684		142.85	97,708
UHS	UNFIN HALF STORY	0	506		42.91	21,713
WDK	WOOD DECK	0	216		19.84	4,285
	Ttl Gross Liv / Lease Area	2,478	5,588	3,247		463,828