Property Location 41 BLUEGRASS DR | Map ID 7/ 5/ 2/7/ / | Bldg Name | State Use 102
Vision ID 6891 | Account # 7015 | Bldg # 1 | Sec # 1 of 1 | Card # 1 of 1 | Print Date 12/20/2019 8:43:32 A

| CURRENT OWNER | TOPO | UTILITIES | STRT / ROAD | LOCATION |
|---|---|---|---|---|
| BRENNAN JUDITH | | 1 TYPCL | | |
| C/O WATERS KATHLEEN | | | | |
| 138 WOOD RD | | | | |
| SOMERS CT 06071 | | | | |

**SUPPLEMENTAL DATA**

| | | | |
|---|---|---|---|
| Alt Prcl ID | | Received | |
| SP Permit | | NIA | |
| Chapter La | | Field 8 | |
| OC Dates | 12/18/2013 | Field 9 | |
| In+Ex FY | | Field 10 | |
| Mailed | | | |
| GIS ID | F_376625_2845743 | Assoc Pid# | |

**CURRENT ASSESSMENT**

| Description | Code | Assessed | Assessed |
|---|---|---|---|
| RESIDNTL. | 102 | 426,600 | 426,600 |
| | Total | 426,600 | 426,600 |

1006
EAST LONGMEADOW, MA

**VISION**

**RECORD OF OWNERSHIP**

| | BK-VOL/PAGE | | SALE DATE | Q/U | V/I | SALE PRICE | VC |
|---|---|---|---|---|---|---|---|
| BRENNAN JUDITH | 20143 | 0208 | 12-20-2013 | U | I | 452,000 | 1 |
| D R CHESTNUT LLC | 16302 | 0279 | 11-02-2006 | U | I | 3,562,500 | 1 |
| RUGBY PROPERTIES LLC, | 0000 | 0000 | | U | | 0 | |

**PREVIOUS ASSESSMENTS (HISTORY)**

| Year | Code | Assessed | Year | Code | Assessed V | Year | Code | Assessed |
|---|---|---|---|---|---|---|---|---|
| 2019 | 102 | 444,400 | 2018 | 102 | 449,100 | 2017 | 102 | 444,600 |
| | Total | 444400 | | Total | 449100 | | Total | 444600 |

**EXEMPTIONS**

| Year | Code | Description | Amount |
|---|---|---|---|
| | | Total | 0.00 |

**OTHER ASSESSMENTS**

| Code | Description | Number | Amount | Comm Int |
|---|---|---|---|---|
| | | | | |

This signature acknowledges a visit by a Data Collector or Assessor

**APPRAISED VALUE SUMMARY**

| | |
|---|---|
| Appraised Bldg. Value (Card) | 426,600 |
| Appraised Xf (B) Value (Bldg) | 0 |
| Appraised Ob (B) Value (Bldg) | 0 |
| Appraised Land Value (Bldg) | 0 |
| Special Land Value | 0 |
| Total Appraised Parcel Value | 426,600 |
| Valuation Method | C |
| Total Appraised Parcel Value | 426,600 |

**ASSESSING NEIGHBORHOOD**

| Nbhd | Nbhd Name | B | Tracing | Batch |
|---|---|---|---|---|
| 0001 | | | 102 | |

**NOTES**

**BUILDING PERMIT RECORD**

| Permit Id | Issue Date | Type | Description | Amount | Insp Date | % Comp | Date Comp | Comments |
|---|---|---|---|---|---|---|---|---|
| 201302496 | 08-09-2013 | 49 | CONDO R | 320,000 | | 100 | | OC 12/18/2013 2010 SF WI |

**VISIT / CHANGE HISTORY**

| Date | Id | Type | Is | Cd | Purpose/Result |
|---|---|---|---|---|---|
| 12-13-2013 | 317 | 01 | | 25 | OC VISIT |

**LAND LINE VALUATION SECTION**

| B | Use Code | Description | Zone | Land Type | Land Units | | Unit Price | Size Adj | Site Index | Cond. | Nbhd. | Nbhd. Adj | Notes | Location Adjustment | | Adj Unit P | Land Value |
|---|---|---|---|---|---|---|---|---|---|---|---|---|---|---|---|---|---|
| 1 | 102 | CONDO | PAR | SITE | 0 | SF | 0.00 | 1.00000 | | 1.00 | FC | 1.000 | 94 UNITS | | 0.0000 | 0.00 | 0 |
| | | | | Total Card Land Units | 0 | SF | Parcel Total Land Area | | | 0.0000 | | | | | | Total Land Value | 0 |

Property Location 41 BLUEGRASS DR | Map ID 7/ 5/ 2/7/ / | Bldg Name | State Use 102
Vision ID 6891 | Account # 7015 | Bldg # 1 | Sec # 1 of 1 | Card # 1 of 1 | Print Date 12/20/2019 8:43:32 A

## CONSTRUCTION DETAIL

| Element | Cd | Description |
|---|---|---|
| Style | 07 | CONDO-GRDN |
| Model | 05 | RES CONDO |
| Grade | B- | GOOD (-) |
| Stories | 1 | |
| Foundation | 1 | CONCRETE |
| Interior Wall 1 | 1 | DRYWALL |
| Interior Wall 2 | | |
| Interior Floor 1 | 3 | HARDWOOD |
| Interior Floor 2 | | |
| Heat Fuel | 2 | GAS |
| Heat Type | 1 | FORCED H/A |
| AC Type | 03 | FULL |
| Bedrooms | 2 | |
| Full Baths | 2 | |
| Half Baths | 0 | |
| Extra Fixtures | | |
| Total Rooms | 6 | |
| Bath Style | G | GOOD |
| Num Kitchens | 1 | |
| Kitchen Style | G | GOOD |
| FBM Sqft | | |
| FBM Quality | | |
| Fireplaces | 1 | |
| WS Flues | | |
| Central Vac | | Yes |
| Frame | 1 | WOOD |
| Bsmt Floor | 12 | CONCRETE |
| Bsmt Garage | | |
| #Heat Sys | 1 | |
| Occupancy | 1 | |
| Int Vs Ext | | |

## CONSTRUCTION DETAIL (CONTINUED)

| Element | Cd | Description |
|---|---|---|
| | | |

## CONDO DATA

| | | | | | |
|---|---|---|---|---|---|
| Parcel Id | 5049 | C | 0010 | Owne | |
| | CHESTNUT | B | 1 | S | 1 |

| Adjust Type | Code | Description | Factor% |
|---|---|---|---|
| Unit Type C | S | SUP IMP | |
| Unit Locatio | D | DETACHED | |

## COST / MARKET VALUATION

| | |
|---|---|
| Adj Base Rate | 124.62 |
| Building Value New | 449,086 |
| Year Built | 2013 |
| Effective Year Built | 2013 |
| Depreciation Code | |
| Remodel Rating | |
| Year Remodeled | |
| Depreciation % | 5 |
| Functional Obsol | |
| External Obsol | |
| Trend Factor | 1 |
| Condition | |
| Condition % | |
| Percent Good | 95 |
| Cns Sect Rcnld | 426,600 |
| Dep % Ovr | |
| Dep Ovr Comment | |
| Misc Imp Ovr | |
| Misc Imp Ovr Comment | |
| Cost to Cure Ovr | |
| Cost to Cure Ovr Comment | |

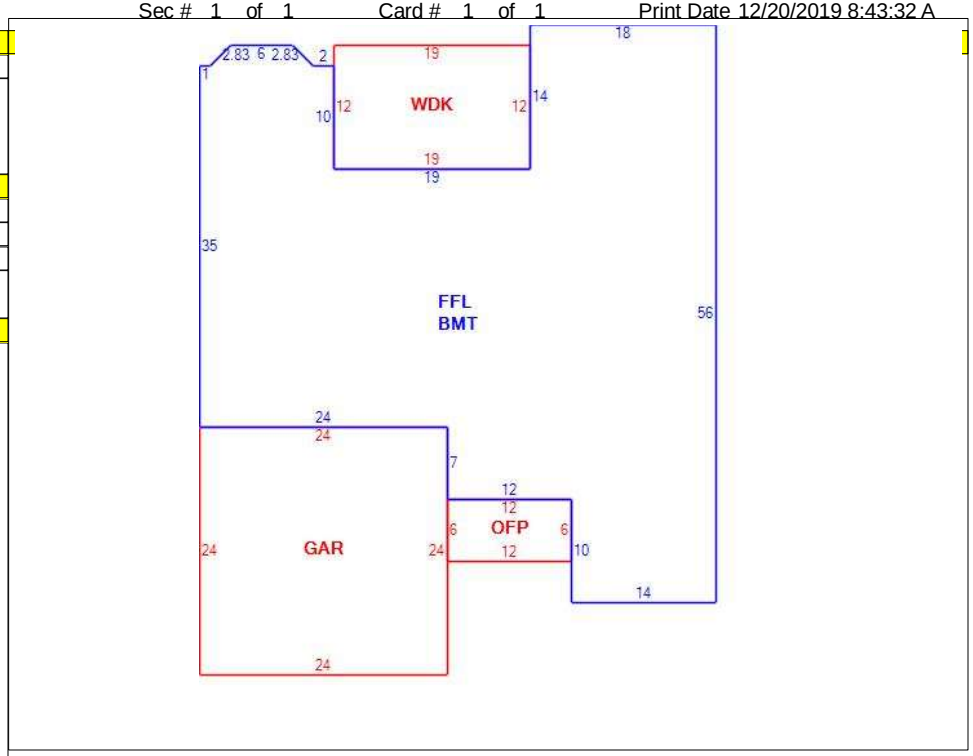


## OB - OUTBUILDING & YARD ITEMS(L) / XF - BUILDING EXTRA FEATURES(B)

| Code | Description | L/B | Units | Unit Price | Yr Blt | Cond. Cd | % Gd | Grade | Grade Adj. | Appr. Value |
|---|---|---|---|---|---|---|---|---|---|---|
| | | | | | | | | | | |

## BUILDING SUB-AREA SUMMARY SECTION

| Code | Description | Living Area | Floor Area | Eff Area | Unit Cost | Undeprec Value |
|---|---|---|---|---|---|---|
| BMT | BASEMENT | 0 | 1,970 | | 34.11 | 67,201 |
| FFL | 1ST FLOOR | 1,970 | 1,970 | | 170.56 | 336,004 |
| GAR | GARAGE | 0 | 576 | | 68.11 | 39,229 |
| OFP | OPEN PORCH | 0 | 72 | | 16.58 | 1,194 |
| WDK | WOOD DECK | 0 | 228 | | 23.94 | 5,458 |
| | Ttl Gross Liv / Lease Area | 1,970 | 4,816 | 2,633 | | 449,086 |