Property Location 45 DONALD AV | Map ID 3B/ 31/ 666/ / | Bldg Name | State Use 101
Vision ID 3291 | Account # 3344 | Bldg # 1 | Sec # 1 of 1 | Card # 1 of 1 | Print Date 11-03-2020 4:42:18 P

CURRENT OWNER	TOPO TYPE	UTILITY	STREET	LOCATION
MOLINARI ELENA LE				
	TOPO WET	EASEMENT	TRAFFIC	CORNER
45 DONALD AVE				
	DRAINAGE		VIEW	COMMUNITY
EAST LONGMEADOW MA 01028				

GIS ID F_376175_2852909

SUPPLEMENTAL DATA

Alt Prcl ID	Received
SP Permit	NIA
Chapter Land	Field 8
OC Dates	Field 9
In+Ex FY	Field 10
Mailed	Assoc Pid#

CURRENT ASSESSMENT

Description	Code	Appraised	Assessed
RESIDNTL.	101	132900	132,900
RES LAND	101	84400	84,400
RESIDNTL.	101	400	400
Total		217,700	217,700

1006
EAST LONGMEADOW

RECORD OF OWNERSHIP

RECORD OF OWNERSHIP	BK-VOL/PAGE		SALE DATE	Q/U	V/I	SALE PRICE	VC
MOLINARI ELENA LE	14972	0274	04-15-2005	U	I	1	1A
MOLINARI ROCCO A + ELENA,LIFE ESTATE	11705	0156	06-20-2001	U	I	1	1A
MOLINARI ROCCO A + ELENA,	04720	0233	01-23-1979	U	I	0	

PREVIOUS ASSESSMENTS (HISTORY)

Year	Code	Assessed	Year	Code	Assessed	Year	Code	Assessed
2020	101	126,600	2019	101	123,400	2018	101	127,700
	101	84,400		101	82,000		101	82,000
	101	400		101	400		101	400
	Total	211400		Total	205800		Total	210100

EXEMPTIONS

Year	Code	Description	Amount
		Total	4,493.12

OTHER ASSESSMENTS

Code	Description	YEAR	Amount	Comm Int

This signature acknowledges a visit by a Data Collector or Assessor

APPRAISED VALUE SUMMARY

Appraised BLDG. Value (Card)	132,900
Appraised Xf (B) Value (Bldg)	0
Appraised Ob (B) Value (Bldg)	400
Appraised Land Value (Bldg)	84,400
Special Land Value	0
Total Appraised Parcel Value	217,700
Valuation Method	C
Adjustment	
Net Total Appraised Parcel Value	217,700

ASSESSING NEIGHBORHOOD

Nbhd	Nbhd Name	B	Tracing	Batch
0001			101	MA

NOTES

BUILDING PERMIT RECORD

Permit Id	Issue Date	Type	Description	Amount	Insp Date	% Comp	Date Comp	Comments

VISIT / CHANGE HISTORY

Date	Type	Is	Id	Cd	Purpose/Result
03-21-2018			333	2	MEASURED
04-28-2004			317	3	MEAS+INSPCTD
04-05-2004			317	1	LEFT NOTICE
05-06-1992			107	22	MAILER SENT
09-06-1990			131	2	MEASURED
06-12-1980			500	3	MEAS+INSPCTD

LAND LINE VALUATION SECTION

B	Use Co	Description	Zone	D	Fronta	Depth	Land Units		Unit Price	I. Fact	S.A.	Ac Di	C. Fact	St. Idx	Adj	Notes	Special Pricing				Size A	Adj Unit Pric	Land Value
1	101	ONE FAM	RC				9,000	SF	9.38	1.000	5	LAND	1.00	MA	1.00			0			1.000	9.38	84,400
Total Card Land Units							0.207	AC	Parcel Total Land Area:			0.2066									Total Land Value		84,400

Property Location 45 DONALD AV | Map ID 3B/ 31/ 666/ / | Bldg Name | State Use 101
Vision ID 3291 | Account # 3344 | Bldg # 1 | Sec # 1 of 1 | Card # 1 of 1 | Print Date 11-03-2020 4:42:18 P

CONSTRUCTION DETAIL

Element	Cd	Description
Style	19	RANCH
Model	01	RESIDENTIAL
Grade	C	AVERAGE
Stories	1.00	1 STORY
Foundation	1	CONCRETE
Exterior Wall 1	4	VINYL
Exterior Wall 2		
Roof Structure	2	HIP
Roof Cover	1	ASPHALT SH
Interior Wall 1	1	DRYWALL
Interior Wall 2		
Interior Floor 1	4	CARPET
Interior Floor 2	3	HARDWOOD
Heat Fuel	1	OIL
Heat Type	3	FORCED H/W
AC Type	01	NONE
Bedrooms	2	
Full Baths	2	
Half Baths	0	
Extra Fixtures	0	
Total Rooms	5	
Bath Style	A	AVERAGE
Half Bath Style		
Kitchens	2	
Kitchen Style	A	AVERAGE
Extra Kitchens	0	
Extra Kitchen St		
FBM Sqft	477	
FBM Quality	3	
Fireplaces	1	
WS Flues		
Central Vac	0	NO
Frame	1	WOOD

CONSTRUCTION DETAIL (CONTINUED)

Element	Cd	Description
Basement Floor	12	CONCRETE
Bsmt Garage	1	
#Heat Sys	1.00	
Units	1	

MIXED USE

Code	Description	Percentage
101	ONE FAM	100
		0
		0

COST / MARKET VALUATION

Adj Base Rate	99.10
RCN	210,953
Net Other Adj	
Year Built	1955
Effective Year Built	1981
Depreciation Code	AG
Remodel Rating	
Year Remodeled	
Depreciation %	37
Functional Obsol	
External Obsol	
Cost Trend Factor	1
Condition	
% Complete	
Overall % Condition	63
RCNLD	132,900
Dep % Ovr	
Dep Ovr Comment	
Misc Imp Ovr	
Misc Imp Ovr Comment	
Cost to Cure Ovr	
Cost to Cure Ovr Comment	

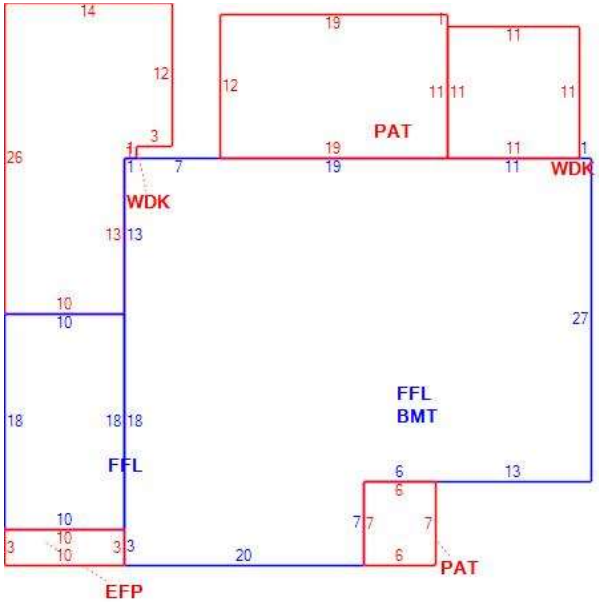

OB - OUTBUILDING & YARD ITEMS(L) / XF - BUILDING EXTRA FEATURES(B)

Code	Description	Su	Sub Type	Lan	Units	Unit Price	Yr Blt	%	Dep.	Cond	Gra	Qual	Apprais Va
02	SHED/FR			L	96	7.48	1988	60	0.00	AV	A	1.00	400

BUILDING SUB-AREA SUMMARY SECTION

Subarea	Description	Living	Gross	Eff Area	Unit Cost	Undeprec Value
BMT	BASEMENT	0	1,193		24.93	29,745
EFP	ENCL PORCH	0	30		37.34	1,120
FFL	1ST FLOOR	1,373	1,373		124.46	170,878
PAT	PATIO	0	270		6.45	1,742
WDK	WOOD DECK	0	430		17.37	7,467
	Ttl Gross Liv / Lease Area	1,373	3,296	1,695		210,953