Property Location 39 PROSPECT HILLS DR | Map ID 42/ 17/ 52/ / | Bldg Name | State Use 101
Vision ID 3545 | Account # 3602 | Bldg # 1 | Sec # 1 of 1 | Card # 1 of 1 | Print Date 11-03-2020 5:21:10 P

CURRENT OWNER	TOPO TYPE	UTILITY	STREET	LOCATION
KANE MICHAEL J				
	TOPO WET	EASEMENT	TRAFFIC	CORNER
6 OLD PASTURE DR				
	DRAINAGE		VIEW	COMMUNITY
EAST LONGMEADOW MA 01028				

SUPPLEMENTAL DATA

Alt Prcl ID	Received
SP Permit	NIA
Chapter Land	Field 8
OC Dates	Field 9
In+Ex FY	Field 10
Mailed	Assoc Pid#

GIS ID F_384177_2843762

CURRENT ASSESSMENT

Description	Code	Appraised	Assessed
RESIDNTL.	101	737600	737,600
RES LAND	101	126000	126,000
Total		863,600	863,600

1006

EAST LONGMEADOW

RECORD OF OWNERSHIP

	BK-VOL/PAGE		SALE DATE	Q/U	V/I	SALE PRICE	VC
KANE MICHAEL J	09276	0589	10-13-1995	U	V	1	1B
PROSPECT PARTNERSHIP THE	09018	0022	12-15-1994	U	V	602,840	1
WARD JOSEPH E ETAL D/B/A	06972	0245	09-22-1988	U	I	1	1B
WARD	0000	0000		U		0	

PREVIOUS ASSESSMENTS (HISTORY)

Year	Code	Assessed	Year	Code	Assessed	Year	Code	Assessed
2020	101	530,900	2019	101	516,100	2018	101	280,400
	101	126,000		101	122,400		101	122,400
	Total	656900		Total	638500		Total	402800

EXEMPTIONS

Year	Code	Description	Amount
		Total	0.00

OTHER ASSESSMENTS

Code	Description	YEAR	Amount	Comm Int

This signature acknowledges a visit by a Data Collector or Assessor

ASSESSING NEIGHBORHOOD

Nbhd	Nbhd Name	B	Tracing	Batch
0001			130	NS

NOTES

SUB DIV #594
2020 BP INSPECTION-ASSUMED COMP
VERIFY AT OC INSPECT

APPRAISED VALUE SUMMARY

Appraised BLDG. Value (Card)	737,600
Appraised Xf (B) Value (Bldg)	0
Appraised Ob (B) Value (Bldg)	0
Appraised Land Value (Bldg)	126,000
Special Land Value	0
Total Appraised Parcel Value	863,600
Valuation Method	C
Adjustment	
Net Total Appraised Parcel Value	863,600

BUILDING PERMIT RECORD

Permit Id	Issue Date	Type	Description	Amount	Insp Date	% Comp	Date Comp	Comments
201601606	10-20-2016	2	DWELLING	700,000	07-01-2020	100	07-01-2020	

VISIT / CHANGE HISTORY

Date	Type	Is	Id	Cd	Purpose/Result
07-01-2020			334	15	PERMIT VISIT
05-28-2019			334	15	PERMIT VISIT
06-18-2018			333	15	PERMIT VISIT
06-22-2017			317	3	MEAS+INSPCTD
04-05-2017			317	15	PERMIT VISIT

LAND LINE VALUATION SECTION

B	Use Co	Description	Zone	D	Fronta	Depth	Land Units		Unit Price	I. Fact	S.A.	Ac Di	C. Fact	St. Idx	Adj	Notes	Special Pricing				Size A	Adj Unit Pric	Land Value
1	101	ONE FAM	RAA				40,000	SF	2.39	1.750	2	LAND	0.75	NS	1.00	WET3		0			1.000	3.14	125,600
1	101	ONE FAM	RAA				0.070	AC	7,000	1.000	0		0.75	NS	1.00	WET3		0			1.000	5,250	400
						Total Card Land Units	0.988	AC	Parcel Total Land Area:			0.9883										Total Land Value	126,000

Property Location 39 PROSPECT HILLS DR | Map ID 42/ 17/ 52/ / | Bldg Name | State Use 101
Vision ID 3545 | Account # 3602 | Bldg # 1 | Sec # 1 of 1 | Card # 1 of 1 | Print Date 11-03-2020 5:21:10 P

CONSTRUCTION DETAIL

Element	Cd	Description
Style	06	COLONIAL
Model	01	RESIDENTIAL
Grade	A	VERY GOOD
Stories	2.00	2 STORY
Foundation	1	CONCRETE
Exterior Wall 1	2	CLAPBOARD
Exterior Wall 2	16	STONE VENR
Roof Structure	2	HIP
Roof Cover	1	ASPHALT SH
Interior Wall 1	1	DRYWALL
Interior Wall 2		
Interior Floor 1	3	HARDWOOD
Interior Floor 2	4	CARPET
Heat Fuel	2	GAS
Heat Type	1	FORCED H/A
AC Type	03	FULL
Bedrooms	4	
Full Baths	3	
Half Baths	1	
Extra Fixtures	4	
Total Rooms	9	
Bath Style	G	GOOD
Half Bath Style	G	GOOD
Kitchens	1	
Kitchen Style	G	GOOD
Extra Kitchens		
Extra Kitchen St		
FBM Sqft		
FBM Quality		
Fireplaces	2	
WS Flues		
Central Vac		
Frame	1	WOOD

CONSTRUCTION DETAIL (CONTINUED)

Element	Cd	Description
Basement Floor	12	CONCRETE
Bsmt Garage		
#Heat Sys	1.00	
Units	1	

MIXED USE

Code	Description	Percentage
101	ONE FAM	100
		0
		0

COST / MARKET VALUATION

Adj Base Rate	67.31
RCN	752,673
Net Other Adj	
Year Built	2017
Effective Year Built	2016
Depreciation Code	GD
Remodel Rating	
Year Remodeled	
Depreciation %	2
Functional Obsol	
External Obsol	
Cost Trend Factor	1
Condition	
% Complete	
Overall % Condition	98
RCNLD	737,600
Dep % Ovr	
Dep Ovr Comment	
Misc Imp Ovr	
Misc Imp Ovr Comment	
Cost to Cure Ovr	
Cost to Cure Ovr Comment	

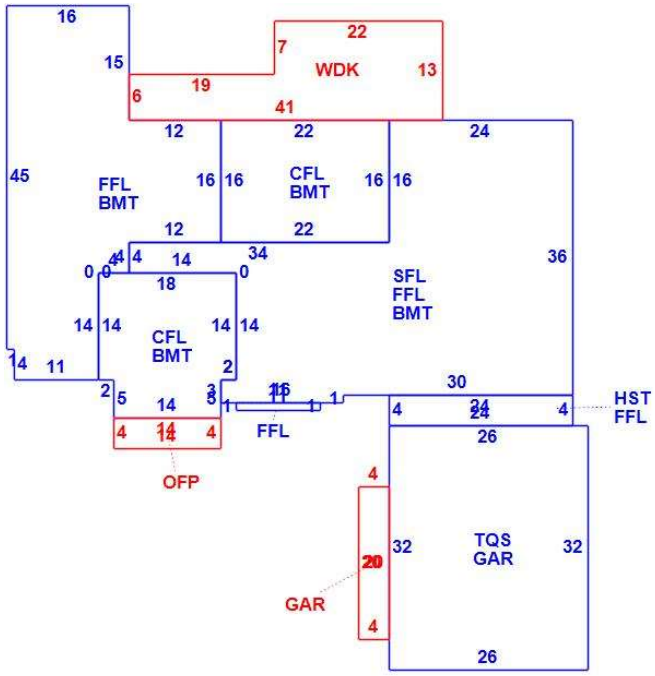

OB - OUTBUILDING & YARD ITEMS(L) / XF - BUILDING EXTRA FEATURES(B)

Code	Description	Su	Sub Type	Lan	Units	Unit Price	Yr Blt	%	Dep.	Cond	Gra	Qual	Apprais Va

BUILDING SUB-AREA SUMMARY SECTION

Subarea	Description	Living	Gross	Eff Area	Unit Cost	Undeprec Value
BMT	BASEMENT	0	2,930		24.75	72,520
CFL	CATHEDRAL CE	674	674		127.43	85,885
FFL	1ST FLOOR	2,363	2,363		123.75	292,431
GAR	GARAGE	0	912		49.53	45,170
HST	HALF STORY	48	96		61.88	5,940
OFP	OPEN PORCH	0	56		13.26	743
SFL	2ND FLOOR	1,340	1,340		123.75	165,831
TQS	3/4 STORY	624	832		92.82	77,223
WDK	WOOD DECK	0	400		17.33	6,930
	Ttl Gross Liv / Lease Area	5,049	9,603	6,082		752,673