Property Location 12 COUNTRY CLUB DR | Map ID 57/ 35/ 61A/ / | Bldg Name | State Use 101
Vision ID 4354 | Account # 4423 | Bldg # 1 | Sec # 1 of 1 | Card # 1 of 1 | Print Date 11-03-2020 7:24:56 P

CURRENT OWNER	TOPO TYPE	UTILITY	STREET	LOCATION
BERNARD KENNETH R				
BERNARD SHARON H	TOPO WET	EASEMENT	TRAFFIC	CORNER
12 COUNTRY CLUB DR	DRAINAGE		VIEW	COMMUNITY
EAST LONGMEADOW MA 01028				

GIS ID F_387126_2839380

SUPPLEMENTAL DATA

Alt Prcl ID	Received
SP Permit	NIA
Chapter Land	Field 8
OC Dates	Field 9
In+Ex FY	Field 10
Mailed	Assoc Pid#

CURRENT ASSESSMENT

Description	Code	Appraised	Assessed
RESIDNTL.	101	317300	317,300
RES LAND	101	143900	143,900
Total		461,200	461,200

1006

EAST LONGMEADOW

RECORD OF OWNERSHIP

	BK-VOL/PAGE		SALE DATE	Q/U	V/I	SALE PRICE	VC
BERNARD KENNETH R	10247	0029	04-17-1998	U	I	260,000	
PEIFFER,GARY W	9536	0119	06-27-1996	U	V	50,000	1F
HOMEWORKS CONSTRUCTION CO INC,	09317	0020	11-22-1995	U	V	65,000	
SOUTH MEADOWS INC	06343	0440	12-30-1986	U	I	1	1B
BARIBEAU ROLAND J +	0000	0000		U		0	

PREVIOUS ASSESSMENTS (HISTORY)

Year	Code	Assessed	Year	Code	Assessed	Year	Code	Assessed
2020	101	304,300	2019	101	295,900	2018	101	284,800
	101	143,900		101	139,900		101	139,900
	Total	448200		Total	435800		Total	424700

EXEMPTIONS

Year	Code	Description	Amount
		Total	0.00

OTHER ASSESSMENTS

Code	Description	YEAR	Amount	Comm Int

This signature acknowledges a visit by a Data Collector or Assessor

ASSESSING NEIGHBORHOOD

Nbhd	Nbhd Name	B	Tracing	Batch
0001			101	NV

NOTES

SUB DIV #588

APPRAISED VALUE SUMMARY

Appraised BLDG. Value (Card)	317,300
Appraised Xf (B) Value (Bldg)	0
Appraised Ob (B) Value (Bldg)	0
Appraised Land Value (Bldg)	143,900
Special Land Value	0
Total Appraised Parcel Value	461,200
Valuation Method	C
Adjustment	
Net Total Appraised Parcel Value	461,200

BUILDING PERMIT RECORD

Permit Id	Issue Date	Type	Description	Amount	Insp Date	% Comp	Date Comp	Comments
295	11-28-1995	MN	Manual Note	140,000				DWELLING

VISIT / CHANGE HISTORY

Date	Type	Is	Id	Cd	Purpose/Result
04-17-2018			333	2	MEASURED
02-27-2009			317	14	INSPECTED
10-31-2008			317	2	MEASURED
03-22-2002			250	22	MAILER SENT
11-20-2001			247	2	MEASURED
08-03-1998			232	2	MEASURED
07-17-1998			105	14	INSPECTED

LAND LINE VALUATION SECTION

B	Use Co	Description	Zone	D	Fronta	Depth	Land Units		Unit Price	I. Fact	S.A.	Ac Di	C. Fact	St. Idx	Adj	Notes	Special Pricing				Size A	Adj Unit Pric	Land Value
1	101	ONE FAM	RAA				40,000	SF	2.39	1.400	9	LAND	1.00	NV	1.00			0			1.000	3.35	134,000
1	101	ONE FAM	RAA				1.410	AC	7,000	1.000	0		1.00	NV	1.00			0			1.000	7,000	9,900
						Total Card Land Units	2.328	AC	Parcel Total Land Area:			2.3283										Total Land Value	143,900

Property Location 12 COUNTRY CLUB DR | Map ID 57/ 35/ 61A/ / | Bldg Name | State Use 101
Vision ID 4354 | Account # 4423 | Bldg # 1 | Sec # 1 of 1 | Card # 1 of 1 | Print Date 11-03-2020 7:24:57 P

CONSTRUCTION DETAIL

Element	Cd	Description
Style	06	COLONIAL
Model	01	RESIDENTIAL
Grade	B-	GOOD (-)
Stories	2.00	2 STORY
Foundation	1	CONCRETE
Exterior Wall 1	4	VINYL
Exterior Wall 2		
Roof Structure	1	GABLE
Roof Cover	1	ASPHALT SH
Interior Wall 1	1	DRYWALL
Interior Wall 2		
Interior Floor 1	4	CARPET
Interior Floor 2	2	SOFTWOOD
Heat Fuel	2	GAS
Heat Type	1	FORCED H/A
AC Type	03	FULL
Bedrooms	4	
Full Baths	2	
Half Baths	1	
Extra Fixtures	0	
Total Rooms	7	
Bath Style	A	AVERAGE
Half Bath Style	A	AVERAGE
Kitchens	1	
Kitchen Style	G	GOOD
Extra Kitchens	0	
Extra Kitchen St		
FBM Sqft	842	
FBM Quality	1	
Fireplaces	1	
WS Flues		
Central Vac	1	YES
Frame	1	WOOD

CONSTRUCTION DETAIL (CONTINUED)

Element	Cd	Description
Basement Floor	12	CONCRETE
Bsmt Garage		
#Heat Sys	1.00	
Units	1	

MIXED USE

Code	Description	Percentage
101	ONE FAM	100
		0
		0

COST / MARKET VALUATION

Adj Base Rate	80.05
RCN	373,314
Net Other Adj	
Year Built	1995
Effective Year Built	2003
Depreciation Code	GD
Remodel Rating	
Year Remodeled	
Depreciation %	15
Functional Obsol	
External Obsol	
Cost Trend Factor	1
Condition	
% Complete	
Overall % Condition	85
RCNLD	317,300
Dep % Ovr	
Dep Ovr Comment	
Misc Imp Ovr	
Misc Imp Ovr Comment	
Cost to Cure Ovr	
Cost to Cure Ovr Comment	

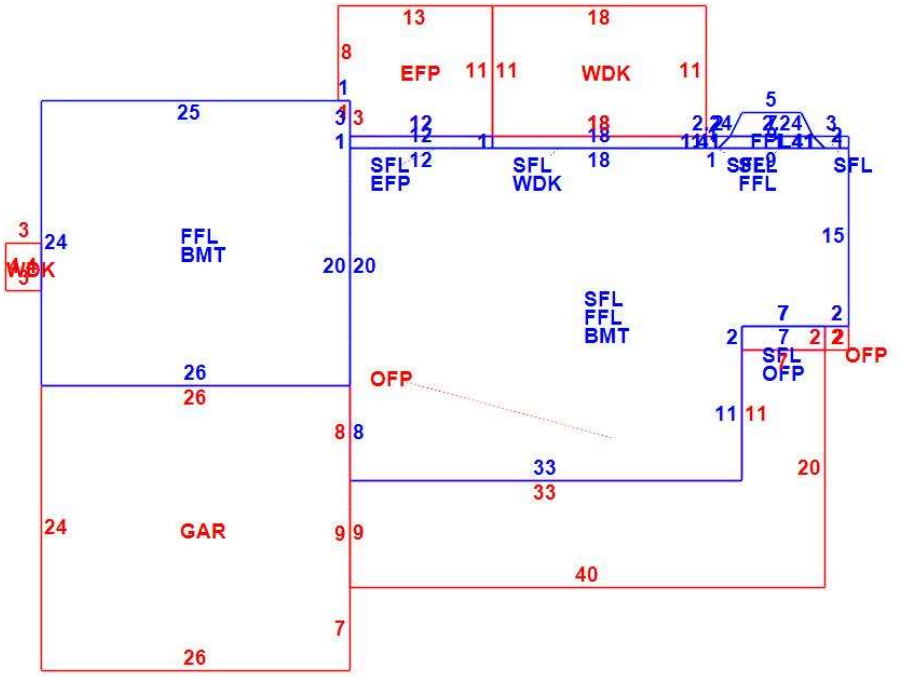

OB - OUTBUILDING & YARD ITEMS(L) / XF - BUILDING EXTRA FEATURES(B)

Code	Description	Su	Sub Type	Lan	Units	Unit Price	Yr Blt	%	Dep.	Cond	Gra	Qual	Apprais Va

BUILDING SUB-AREA SUMMARY SECTION

Subarea	Description	Living	Gross	Eff Area	Unit Cost	Undeprec Value
BMT	BASEMENT	0	1,683		21.18	35,639
EFP	ENCL PORCH	0	152		32.00	4,865
FFL	1ST FLOOR	1,703	1,703		105.75	180,100
GAR	GARAGE	0	624		42.37	26,439
OFP	OPEN PORCH	0	455		10.69	4,865
SFL	2ND FLOOR	1,116	1,116		105.75	118,022
WDK	WOOD DECK	0	228		14.84	3,384
	Ttl Gross Liv / Lease Area	2,819	5,961	3,530		373,314