Property Location 269 PORTER RD | Map ID 59/ 57/ 4/ / | Bldg Name | State Use 101
Vision ID 4490 | Account # 4563 | Bldg # 1 | Sec # 1 of 1 | Card # 1 of 1 | Print Date 11-03-2020 7:45:59 P

CURRENT OWNER	TOPO TYPE	UTILITY	STREET	LOCATION
WALAS RICHARD S JR				
	TOPO WET	EASEMENT	TRAFFIC	CORNER
269 PORTER RD				
	DRAINAGE		VIEW	COMMUNITY
E LONGMEADOW MA 01028				

SUPPLEMENTAL DATA

Alt Prcl ID	Received
SP Permit	NIA
Chapter Land	Field 8
OC Dates	Field 9
In+Ex FY	Field 10
Mailed	Assoc Pid#

GIS ID F_388901_2855765

CURRENT ASSESSMENT

Description	Code	Appraised	Assessed
RESIDNTL.	101	117800	117,800
RES LAND	101	95000	95,000
Total		212,800	212,800

1006

EAST LONGMEADOW

RECORD OF OWNERSHIP

	BK-VOL/PAGE		SALE DATE	Q/U	V/I	SALE PRICE	VC
WALAS RICHARD S JR	18712	0070	03-17-2011	U	I	100	1A
WALAS RICHARD,	02686	0030	07-01-1959	U	I	0	

PREVIOUS ASSESSMENTS (HISTORY)

Year	Code	Assessed	Year	Code	Assessed	Year	Code	Assessed
2020	101	111,300	2019	101	108,000	2018	101	110,100
	101	95,000		101	92,200		101	92,200
	Total	206300		Total	200200		Total	202300

EXEMPTIONS

Year	Code	Description	Amount
		Total	0.00

OTHER ASSESSMENTS

Code	Description	YEAR	Amount	Comm Int

This signature acknowledges a visit by a Data Collector or Assessor

ASSESSING NEIGHBORHOOD

Nbhd	Nbhd Name	B	Tracing	Batch
0001			101	MG

NOTES

APPRAISED VALUE SUMMARY

Appraised BLDG. Value (Card)	117,800
Appraised Xf (B) Value (Bldg)	0
Appraised Ob (B) Value (Bldg)	0
Appraised Land Value (Bldg)	95,000
Special Land Value	0
Total Appraised Parcel Value	212,800
Valuation Method	C
Adjustment	
Net Total Appraised Parcel Value	212,800

BUILDING PERMIT RECORD

Permit Id	Issue Date	Type	Description	Amount	Insp Date	% Comp	Date Comp	Comments

VISIT / CHANGE HISTORY

Date	Type	Is	Id	Cd	Purpose/Result
07-03-2018			333	2	MEASURED
06-27-2008			317	3	MEAS+INSPCTD
04-11-2002			274	14	INSPECTED
03-22-2002			250	22	MAILER SENT
11-19-2001			247	2	MEASURED
03-11-1992			170	3	MEAS+INSPCTD
01-19-1981			500	3	MEAS+INSPCTD

LAND LINE VALUATION SECTION

B	Use Co	Description	Zone	D	Fronta	Depth	Land Units		Unit Price	I. Fact	S.A.	Ac Di	C. Fact	St. Idx	Adj	Notes	Special Pricing				Size A	Adj Unit Pric	Land Value
1	101	ONE FAM	RA				20,000	SF	4.43	1.190	7	LAND	1.00	MG	1.00			0	TRF1	0.9	1.000	4.75	95,000
						Total Card Land Units	0.459	AC	Parcel Total Land Area:	0.4591												Total Land Value	95,000

Property Location 269 PORTER RD | Map ID 59/ 57/ 4/ / | Bldg Name | State Use 101
Vision ID 4490 | Account # 4563 | Bldg # 1 | Sec # 1 of 1 | Card # 1 of 1 | Print Date 11-03-2020 7:46:00 P

CONSTRUCTION DETAIL

Element	Cd	Description
Style	19	RANCH
Model	01	RESIDENTIAL
Grade	C	AVERAGE
Stories	1.00	1 STORY
Foundation	2	CONC BLOCK
Exterior Wall 1	1	WOOD SHING
Exterior Wall 2		
Roof Structure	1	GABLE
Roof Cover	1	ASPHALT SH
Interior Wall 1	2	PLASTER
Interior Wall 2		
Interior Floor 1	3	HARDWOOD
Interior Floor 2	4	CARPET
Heat Fuel	1	OIL
Heat Type	3	FORCED H/W
AC Type	01	NONE
Bedrooms	3	
Full Baths	1	
Half Baths	0	
Extra Fixtures	0	
Total Rooms	6	
Bath Style	A	AVERAGE
Half Bath Style		
Kitchens	1	
Kitchen Style	A	AVERAGE
Extra Kitchens	0	
Extra Kitchen St		
FBM Sqft		
FBM Quality		
Fireplaces	0	
WS Flues		
Central Vac	0	NO
Frame	1	WOOD

CONSTRUCTION DETAIL (CONTINUED)

Element	Cd	Description
Basement Floor	12	CONCRETE
Bsmt Garage		
#Heat Sys	1.00	
Units	1	

MIXED USE

Code	Description	Percentage
101	ONE FAM	100
		0
		0

COST / MARKET VALUATION

Adj Base Rate	96.93
RCN	206,743
Net Other Adj	
Year Built	1956
Effective Year Built	1975
Depreciation Code	AV
Remodel Rating	
Year Remodeled	
Depreciation %	43
Functional Obsol	
External Obsol	
Cost Trend Factor	1
Condition	
% Complete	
Overall % Condition	57
RCNLD	117,800
Dep % Ovr	
Dep Ovr Comment	
Misc Imp Ovr	
Misc Imp Ovr Comment	
Cost to Cure Ovr	
Cost to Cure Ovr Comment	

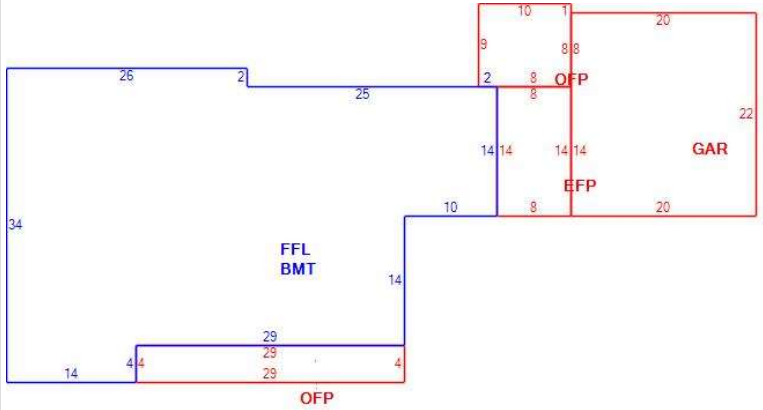

OB - OUTBUILDING & YARD ITEMS(L) / XF - BUILDING EXTRA FEATURES(B)

Code	Description	Su	Sub Type	Lan	Units	Unit Price	Yr Blt	%	Dep.	Cond	Gra	Qual	Apprais Va

BUILDING SUB-AREA SUMMARY SECTION

Subarea	Description	Living	Gross	Eff Area	Unit Cost	Undeprec Value
BMT	BASEMENT	0	1,452		20.93	30,388
EFP	ENCL PORCH	0	112		31.81	3,563
FFL	1ST FLOOR	1,452	1,452		104.79	152,149
GAR	GARAGE	0	440		41.91	18,442
OFP	OPEN PORCH	0	206		10.68	2,201
	Ttl Gross Liv / Lease Area	1,452	3,662	1,973		206,743