Property Location 5 PEACHTREE RD | Map ID 62/ 26/ 2/ / | Bldg Name | State Use 101
Vision ID 4788 | Account # 4861 | Bldg # 1 | Sec # 1 of 1 | Card # 1 of 1 | Print Date 11-03-2020 8:32:13 P

CURRENT OWNER	TOPO TYPE	UTILITY	STREET	LOCATION
ROSARIO NATHANAEL L				
ROSARIO ERIN L	TOPO WET	EASEMENT	TRAFFIC	CORNER
5 PEACHTREE RD	DRAINAGE		VIEW	COMMUNITY
EAST LONGMEADOW MA 01028				

GIS ID F_390033_2851079

SUPPLEMENTAL DATA

Alt Prcl ID	Received
SP Permit	NIA
Chapter Land	Field 8
OC Dates	Field 9
In+Ex FY	Field 10
Mailed	Assoc Pid#

CURRENT ASSESSMENT

Description	Code	Appraised	Assessed
RESIDNTL.	101	369400	369,400
RES LAND	101	112300	112,300
RESIDNTL.	101	21400	21,400
Total		503,100	503,100

1006

EAST LONGMEADOW

RECORD OF OWNERSHIP

	BK-VOL/PAGE		SALE DATE	Q/U	V/I	SALE PRICE	VC
ROSARIO NATHANAEL L	18719	0282	03-28-2011	U	I	422,000	
CABOT DEVELOPMENT CORPORATION,	15957	0572	06-06-2006	U	V	1	1B
CABOT REAL ESTATE LLC,A MASSACHUSE	14165	0199	05-12-2004	U	I	150,000	1
STEVENS CURTIS R + GEORGE R,	07000	0052	10-24-1988	U	I	1	1A
STEVENS	02206	0178	10-29-1952	U	I	0	

PREVIOUS ASSESSMENTS (HISTORY)

Year	Code	Assessed	Year	Code	Assessed	Year	Code	Assessed
2020	101	353,300	2019	101	330,400	2018	101	309,500
	101	112,300		101	108,900		101	108,900
	101	1,300		101	1,300			
	Total	466900		Total	440600		Total	418400

EXEMPTIONS

Year	Code	Description	Amount
		Total	0.00

OTHER ASSESSMENTS

Code	Description	YEAR	Amount	Comm Int

This signature acknowledges a visit by a Data Collector or Assessor

ASSESSING NEIGHBORHOOD

Nbhd	Nbhd Name	B	Tracing	Batch
0001			101	NV

NOTES

SUB DIV 937/938

SUB DIV 974

APPRAISED VALUE SUMMARY

Appraised BLDG. Value (Card)	369,400
Appraised Xf (B) Value (Bldg)	0
Appraised Ob (B) Value (Bldg)	21,400
Appraised Land Value (Bldg)	112,300
Special Land Value	0
Total Appraised Parcel Value	503,100
Valuation Method	C
Adjustment	
Net Total Appraised Parcel Value	503,100

BUILDING PERMIT RECORD

Permit Id	Issue Date	Type	Description	Amount	Insp Date	% Comp	Date Comp	Comments
201902043	06-01-2019	11	POOL	20,500	06-30-2020	100	06-30-2020	22X36 INGRND
201702354	09-01-2017	10	SHED	11,000	02-28-2018	100	02-28-2018	12X20
45	03-01-2005	2	DWELLING	270,000				OC 7/13/2007
132	06-01-2004	5	DEMOLITION	5,000				HOUSE & GARAGE

VISIT / CHANGE HISTORY

Date	Type	Is	Id	Cd	Purpose/Result
06-30-2020			334	15	PERMIT VISIT
02-28-2018			333	15	PERMIT VISIT
08-02-2012			400	GC	GENERAL
03-21-2008			317	15	PERMIT VISIT
01-14-2008			250	22	MAILER SENT
06-28-2007			311	2	MEASURED
03-01-2007			311	15	PERMIT VISIT

LAND LINE VALUATION SECTION

B	Use Co	Description	Zone	D	Fronta	Depth	Land Units		Unit Price	I. Fact	S.A.	Ac Di	C. Fact	St. Idx	Adj	Notes	Special Pricing				Size A	Adj Unit Pric	Land Value
1	101	ONE FAM	RA				26,239	SF	3.45	1.240	8	LAND	1.00	NG	1.00			0			1.000	4.28	112,300
Total Card Land Units							0.602	AC	Parcel Total Land Area:			0.6024									Total Land Value		112,300

Property Location 5 PEACHTREE RD | Map ID 62/ 26/ 2/ / | Bldg Name | State Use 101
Vision ID 4788 | Account # 4861 | Bldg # 1 | Sec # 1 of 1 | Card # 1 of 1 | Print Date 11-03-2020 8:32:14 P

CONSTRUCTION DETAIL

Element	Cd	Description
Style	06	COLONIAL
Model	01	RESIDENTIAL
Grade	B	GOOD
Stories	2.00	2 STORY
Foundation	1	CONCRETE
Exterior Wall 1	4	VINYL
Exterior Wall 2	8	BRICK VENR
Roof Structure	1	GABLE
Roof Cover	1	ASPHALT SH
Interior Wall 1	1	DRYWALL
Interior Wall 2		
Interior Floor 1	3	HARDWOOD
Interior Floor 2	4	CARPET
Heat Fuel	2	GAS
Heat Type	1	FORCED H/A
AC Type	03	FULL
Bedrooms	4	
Full Baths	2	
Half Baths	1	
Extra Fixtures	3	
Total Rooms	8	
Bath Style	V	VERY GOOD
Half Bath Style	G	GOOD
Kitchens	1	
Kitchen Style	V	V GOOD
Extra Kitchens	0	
Extra Kitchen St		
FBM Sqft	725	
FBM Quality	4	
Fireplaces	1	
WS Flues		
Central Vac	0	NO
Frame	1	WOOD

CONSTRUCTION DETAIL (CONTINUED)

Element	Cd	Description
Basement Floor	12	CONCRETE
Bsmt Garage		
#Heat Sys	1.00	
Units	1	

MIXED USE

Code	Description	Percentage
101	ONE FAM	100
		0
		0

COST / MARKET VALUATION

Adj Base Rate	84.56
RCN	405,984
Net Other Adj	
Year Built	2005
Effective Year Built	2009
Depreciation Code	GD
Remodel Rating	
Year Remodeled	
Depreciation %	9
Functional Obsol	
External Obsol	
Cost Trend Factor	1
Condition	
% Complete	
Overall % Condition	91
RCNLD	369,400
Dep % Ovr	
Dep Ovr Comment	
Misc Imp Ovr	
Misc Imp Ovr Comment	
Cost to Cure Ovr	
Cost to Cure Ovr Comment	

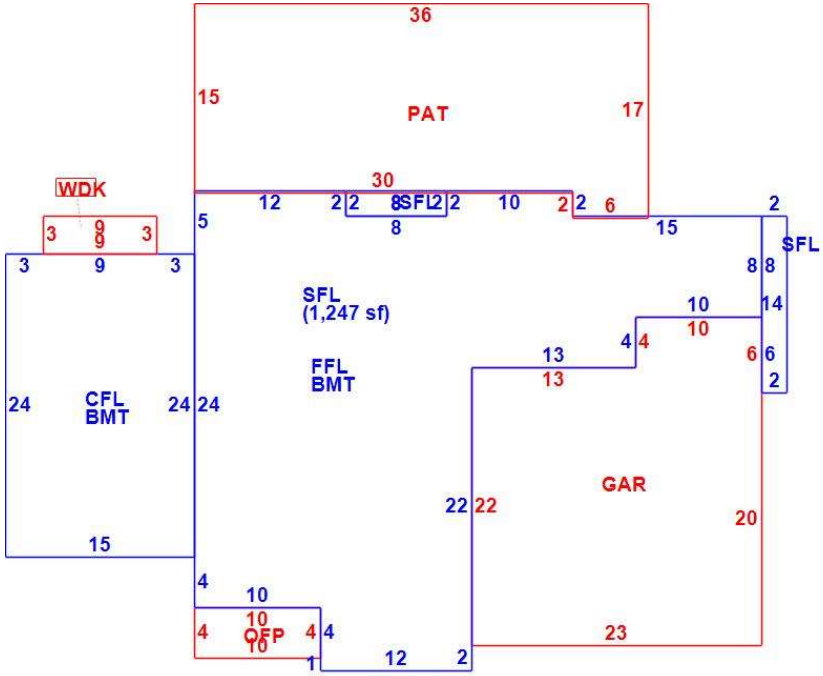

OB - OUTBUILDING & YARD ITEMS(L) / XF - BUILDING EXTRA FEATURES(B)

Code	Description	Su	Sub Type	Lan	Units	Unit Price	Yr Blt	%	Dep.	Cond	Gra	Qual	Apprais Va
02	SHED/FR			L	240	7.48	2017	70	0.00	GD	A	1.00	1,300
11	POOL I-V	OB	Outbuildi	L	792	29.00	2019	70	0.00	GD	G	1.25	20,100

BUILDING SUB-AREA SUMMARY SECTION

Subarea	Description	Living	Gross	Eff Area	Unit Cost	Undeprec Value
BMT	BASEMENT	0	1,382		25.23	34,864
CFL	CATHEDRAL CE	360	360		130.18	46,864
FFL	1ST FLOOR	1,022	1,022		126.32	129,096
GAR	GARAGE	0	546		50.43	27,537
OFP	OPEN PORCH	0	40		12.63	505
PAT	PATIO	0	552		6.41	3,537
SFL	2ND FLOOR	1,291	1,291		126.32	163,076
WDK	WOOD DECK	0	27		18.71	505
	Ttl Gross Liv / Lease Area	2,673	5,220	3,214		405,984