Property Location 416 PARKER ST | Map ID 62/ 42/ 0/ / | Bldg Name | State Use 101
Vision ID 4804 | Account # 4878 | Bldg # 1 | Sec # 1 of 1 | Card # 1 of 1 | Print Date 11-03-2020 8:34:52 P

CURRENT OWNER	TOPO TYPE	UTILITY	STREET	LOCATION
TRAN PHUONG V				
	TOPO WET	EASEMENT	TRAFFIC	CORNER
416 PARKER ST				
	DRAINAGE		VIEW	COMMUNITY
EAST LONGMEADOW MA 01028				

SUPPLEMENTAL DATA

Alt Prcl ID	Received
SP Permit	NIA
Chapter Land	Field 8
OC Dates	Field 9
In+Ex FY	Field 10
Mailed	Assoc Pid#

GIS ID F_389495_2851031

CURRENT ASSESSMENT

Description	Code	Appraised	Assessed
RESIDNTL.	101	142700	142,700
RES LAND	101	103800	103,800
Total		246,500	246,500

1006

EAST LONGMEADOW

RECORD OF OWNERSHIP

	BK-VOL/PAGE		SALE DATE	Q/U	V/I	SALE PRICE	VC
TRAN PHUONG V	11106	0179	02-28-2000	U	I	138,000	
PENDERGRAST RICHARD,	05125	0061	06-19-1981	U	I	0	

PREVIOUS ASSESSMENTS (HISTORY)

Year	Code	Assessed	Year	Code	Assessed	Year	Code	Assessed
2020	101	135,300	2019	101	131,700	2018	101	121,900
	101	103,800		101	101,000		101	101,000
	Total	239100		Total	232700		Total	222900

EXEMPTIONS

Year	Code	Description	Amount
		Total	0.00

OTHER ASSESSMENTS

Code	Description	YEAR	Amount	Comm Int

This signature acknowledges a visit by a Data Collector or Assessor

ASSESSING NEIGHBORHOOD

Nbhd	Nbhd Name	B	Tracing	Batch
0001			101	MG

NOTES

APPRAISED VALUE SUMMARY

Appraised BLDG. Value (Card)	142,700
Appraised Xf (B) Value (Bldg)	0
Appraised Ob (B) Value (Bldg)	0
Appraised Land Value (Bldg)	103,800
Special Land Value	0
Total Appraised Parcel Value	246,500
Valuation Method	C
Adjustment	
Net Total Appraised Parcel Value	246,500

BUILDING PERMIT RECORD

Permit Id	Issue Date	Type	Description	Amount	Insp Date	% Comp	Date Comp	Comments
201202197	05-16-2012	42	REPAIRS	19,243				ROOF, GUTTERS, D
216	09-01-1989	MN	Manual Note	28,650				ADDITION

VISIT / CHANGE HISTORY

Date	Type	Is	Id	Cd	Purpose/Result
08-15-2019			334	2	MEASURED
06-07-2013			317	15	PERMIT VISIT
06-15-2012			317	15	PERMIT VISIT
11-02-2007			317	3	MEAS+INSPCTD
10-16-2001			247	14	INSPECTED
08-10-2001			247	2	MEASURED
04-19-1990			131	15	PERMIT VISIT

LAND LINE VALUATION SECTION

B	Use Co	Description	Zone	D	Fronta	Depth	Land Units		Unit Price	I. Fact	S.A.	Ac Di	C. Fact	St. Idx	Adj	Notes	Special Pricing				Size A	Adj Unit Pric	Land Value
1	101	ONE FAM	RA				40,000	SF	2.39	1.190	7	LAND	1.00	MG	1.00			0	TRF1	0.9	1.000	2.56	102,400
1	101	ONE FAM	RA				0.200	AC	7,000	1.000	0		1.00	MG	1.00			0			1.000	7,000	1,400
						Total Card Land Units	1.118	AC	Parcel Total Land Area:			1.1183										Total Land Value	103,800

Property Location 416 PARKER ST | Map ID 62/ 42/ 0/ / | Bldg Name | State Use 101
Vision ID 4804 | Account # 4878 | Bldg # 1 | Sec # 1 of 1 | Card # 1 of 1 | Print Date 11-03-2020 8:34:53 P

CONSTRUCTION DETAIL

Element	Cd	Description
Style	19	RANCH
Model	01	RESIDENTIAL
Grade	C	AVERAGE
Stories	1.00	1 STORY
Foundation	1	CONCRETE
Exterior Wall 1	4	VINYL
Exterior Wall 2		
Roof Structure	1	GABLE
Roof Cover	1	ASPHALT SH
Interior Wall 1	2	PLASTER
Interior Wall 2		
Interior Floor 1	3	HARDWOOD
Interior Floor 2		
Heat Fuel	1	OIL
Heat Type	3	FORCED H/W
AC Type	01	NONE
Bedrooms	3	
Full Baths	2	
Half Baths	0	
Extra Fixtures	1	
Total Rooms	7	
Bath Style	A	AVERAGE
Half Bath Style		
Kitchens	1	
Kitchen Style	A	AVERAGE
Extra Kitchens	0	
Extra Kitchen St		
FBM Sqft	480	
FBM Quality	3	
Fireplaces	1	
WS Flues		
Central Vac	0	NO
Frame	1	WOOD

CONSTRUCTION DETAIL (CONTINUED)

Element	Cd	Description
Basement Floor	12	CONCRETE
Bsmt Garage		
#Heat Sys	1.00	
Units	1	

MIXED USE

Code	Description	Percentage
101	ONE FAM	100
		0
		0

COST / MARKET VALUATION

Adj Base Rate	96.34
RCN	226,460
Net Other Adj	
Year Built	1950
Effective Year Built	1981
Depreciation Code	AG
Remodel Rating	
Year Remodeled	
Depreciation %	37
Functional Obsol	
External Obsol	
Cost Trend Factor	1
Condition	
% Complete	
Overall % Condition	63
RCNLD	142,700
Dep % Ovr	
Dep Ovr Comment	
Misc Imp Ovr	
Misc Imp Ovr Comment	
Cost to Cure Ovr	
Cost to Cure Ovr Comment	

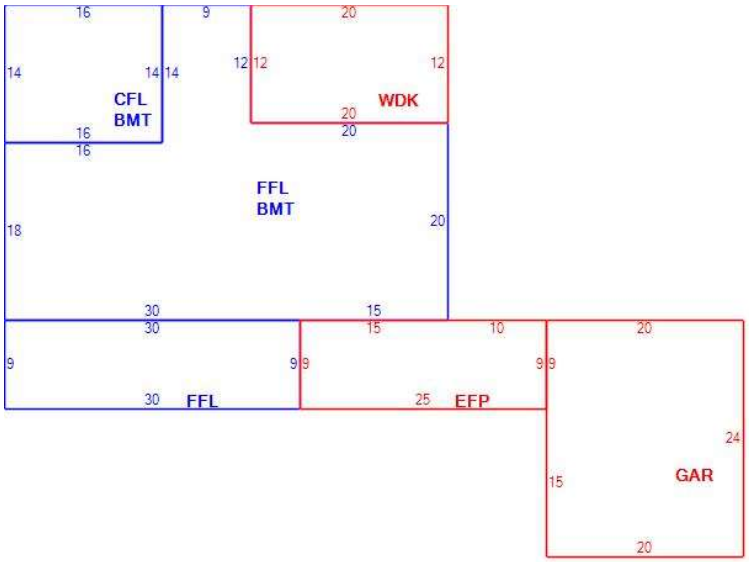

OB - OUTBUILDING & YARD ITEMS(L) / XF - BUILDING EXTRA FEATURES(B)

Code	Description	Su	Sub Type	Lan	Units	Unit Price	Yr Blt	%	Dep.	Cond	Gra	Qual	Apprais Va

BUILDING SUB-AREA SUMMARY SECTION

Subarea	Description	Living	Gross	Eff Area	Unit Cost	Undeprec Value
BMT	BASEMENT	0	1,200		22.52	27,027
CFL	CATHEDRAL CE	224	224		116.13	26,013
EFP	ENCL PORCH	0	225		34.03	7,658
FFL	1ST FLOOR	1,246	1,246		112.61	140,313
GAR	GARAGE	0	480		45.04	21,621
WDK	WOOD DECK	0	240		15.95	3,829
	Ttl Gross Liv / Lease Area	1,470	3,615	2,011		226,460