Property Location 38 BROOKHAVEN DR | Map ID 70/ 43/ 14/ / | Bldg Name | State Use 101
Vision ID 5124 | Account # 5201 | Bldg # 1 | Sec # 1 of 1 | Card # 1 of 1 | Print Date 11-04-2020 8:31:17 A

| CURRENT OWNER | TOPO TYPE | UTILITY | STREET | LOCATION |
|---|---|---|---|---|
| MICHAUD KENNETH R | | | | |
| MICHAUD VICTORIA | TOPO WET | EASEMENT | TRAFFIC | CORNER |
| 38 BROOKHAVEN DR | DRAINAGE | | VIEW | COMMUNITY |
| EAST LONGEADOW MA 01028 | | | | |

**SUPPLEMENTAL DATA**

| | |
|---|---|
| Alt Prcl ID | Received |
| SP Permit | NIA |
| Chapter Land | Field 8 |
| OC Dates | Field 9 |
| In+Ex FY | Field 10 |
| Mailed | Assoc Pid# |

GIS ID F_390984_2857291

**CURRENT ASSESSMENT**

| Description | Code | Appraised | Assessed |
|---|---|---|---|
| RESIDNTL. | 101 | 151100 | 151,100 |
| RES LAND | 101 | 119900 | 119,900 |
| RESIDNTL. | 101 | 17500 | 17,500 |
| Total | | 288,500 | 288,500 |

1006
EAST LONGMEADOW

**RECORD OF OWNERSHIP**

| | BK-VOL/PAGE | | SALE DATE | Q/U | V/I | SALE PRICE | VC |
|---|---|---|---|---|---|---|---|
| MICHAUD KENNETH R | 19345 | 0313 | 07-13-2012 | U | I | 280,000 | 00 |
| ZIEMBIENSKI DANIEL E, | 16473 | 0354 | 01-16-2007 | U | I | 1 | 1A |
| ZIEMBIENSKI ,STANLEY TRUSTEE OF | 10474 | 0420 | 10-05-1998 | U | I | 1 | 1A |
| ZIEMBIENSKI STANLEY F, | 08496 | 0079 | 07-20-1993 | U | I | 1 | 1A |
| ZIEMBIENSKI STANLEY F + | 04966 | 0363 | 07-16-1980 | U | I | 0 | |

**PREVIOUS ASSESSMENTS (HISTORY)**

| Year | Code | Assessed | Year | Code | Assessed | Year | Code | Assessed |
|---|---|---|---|---|---|---|---|---|
| 2020 | 101 | 142,900 | 2019 | 101 | 138,900 | 2018 | 101 | 128,000 |
| | 101 | 119,900 | | 101 | 116,700 | | 101 | 116,700 |
| | 101 | 17,500 | | 101 | 17,600 | | 101 | 17,600 |
| | Total | 280300 | | Total | 273200 | | Total | 262300 |

**EXEMPTIONS**

| Year | Code | Description | Amount |
|---|---|---|---|
| | | Total | 0.00 |

**OTHER ASSESSMENTS**

| Code | Description | YEAR | Amount | Comm Int |
|---|---|---|---|---|
| | | | | |

This signature acknowledges a visit by a Data Collector or Assessor

**ASSESSING NEIGHBORHOOD**

| Nbhd | Nbhd Name | B | Tracing | Batch |
|---|---|---|---|---|
| 0001 | | | 101 | MG |

**NOTES**

**APPRAISED VALUE SUMMARY**

| | |
|---|---|
| Appraised BLDG. Value (Card) | 151,100 |
| Appraised Xf (B) Value (Bldg) | 0 |
| Appraised Ob (B) Value (Bldg) | 17,500 |
| Appraised Land Value (Bldg) | 119,900 |
| Special Land Value | 0 |
| Total Appraised Parcel Value | 288,500 |
| Valuation Method | C |
| Adjustment | |
| Net Total Appraised Parcel Value | 288,500 |

**BUILDING PERMIT RECORD**

| Permit Id | Issue Date | Type | Description | Amount | Insp Date | % Comp | Date Comp | Comments |
|---|---|---|---|---|---|---|---|---|
| 201500392 | 02-25-2015 | 62 | SOLAR | 54,825 | 04-17-2015 | 100 | 04-17-2015 | |
| 201402625 | 10-06-2014 | 91 | INSULATION | 1,000 | | 0 | | |
| 201301605 | 04-30-2013 | 91 | INSULATION | 2,000 | | | | |

**VISIT / CHANGE HISTORY**

| Date | Type | Is | Id | Cd | Purpose/Result |
|---|---|---|---|---|---|
| 04-17-2015 | | | 317 | 15 | PERMIT VISIT |
| 06-07-2013 | | | 317 | 15 | PERMIT VISIT |
| 09-07-2012 | | | 317 | 3 | MEAS+INSPCTD |
| 05-03-2007 | | | 311 | 14 | INSPECTED |
| 04-03-2007 | | | 250 | 22 | MAILER SENT |
| 10-26-2006 | | | 311 | 2 | MEASURED |
| 04-11-2000 | | | 247 | 14 | INSPECTED |

**LAND LINE VALUATION SECTION**

| B | Use Co | Description | Zone | D | Fronta | Depth | Land Units | | Unit Price | I. Fact | S.A. | Ac Di | C. Fact | St. Idx | Adj | Notes | Special Pricing | | | | Size A | Adj Unit Pric | Land Value |
|---|---|---|---|---|---|---|---|---|---|---|---|---|---|---|---|---|---|---|---|---|---|---|---|
| 1 | 101 | ONE FAM | RA | | | | 40,000 | SF | 2.39 | 1.190 | 7 | LAND | 1.00 | MG | 1.00 | | | 0 | | | 1.000 | 2.84 | 113,600 |
| 1 | 101 | ONE FAM | RA | | | | 0.900 | AC | 7,000 | 1.000 | 0 | | 1.00 | MG | 1.00 | | | 0 | | | 1.000 | 7,000 | 6,300 |
| | | | | | | Total Card Land Units | 1.818 | AC | Parcel Total Land Area: | | | 1.8183 | | | | | | | | | | Total Land Value | 119,900 |

Property Location 38 BROOKHAVEN DR | Map ID 70/ 43/ 14/ / | Bldg Name | State Use 101
Vision ID 5124 | Account # 5201 | Bldg # 1 | Sec # 1 of 1 | Card # 1 of 1 | Print Date 11-04-2020 8:31:17 A

## CONSTRUCTION DETAIL

| Element | Cd | Description |
|---|---|---|
| Style | 19 | RANCH |
| Model | 01 | RESIDENTIAL |
| Grade | C | AVERAGE |
| Stories | 1.00 | 1 STORY |
| Foundation | 1 | CONCRETE |
| Exterior Wall 1 | 8 | BRICK VENR |
| Exterior Wall 2 | 4 | VINYL |
| Roof Structure | 1 | GABLE |
| Roof Cover | 1 | ASPHALT SH |
| Interior Wall 1 | 2 | PLASTER |
| Interior Wall 2 | | |
| Interior Floor 1 | 3 | HARDWOOD |
| Interior Floor 2 | 4 | CARPET |
| Heat Fuel | 1 | OIL |
| Heat Type | 3 | FORCED H/W |
| AC Type | 01 | NONE |
| Bedrooms | 3 | |
| Full Baths | 2 | |
| Half Baths | 0 | |
| Extra Fixtures | 0 | |
| Total Rooms | 7 | |
| Bath Style | A | AVERAGE |
| Half Bath Style | | |
| Kitchens | 1 | |
| Kitchen Style | A | AVERAGE |
| Extra Kitchens | 0 | |
| Extra Kitchen St | | |
| FBM Sqft | | |
| FBM Quality | | |
| Fireplaces | 1 | |
| WS Flues | | |
| Central Vac | 0 | NO |
| Frame | 1 | WOOD |

## CONSTRUCTION DETAIL (CONTINUED)

| Element | Cd | Description |
|---|---|---|
| Basement Floor | 12 | CONCRETE |
| Bsmt Garage | | |
| #Heat Sys | 1.00 | |
| Units | 1 | |

## MIXED USE

| Code | Description | Percentage |
|---|---|---|
| 101 | ONE FAM | 100 |
| | | 0 |
| | | 0 |

## COST / MARKET VALUATION

| | |
|---|---|
| Adj Base Rate | 91.81 |
| RCN | 239,794 |
| Net Other Adj | |
| Year Built | 1962 |
| Effective Year Built | 1981 |
| Depreciation Code | AG |
| Remodel Rating | |
| Year Remodeled | |
| Depreciation % | 37 |
| Functional Obsol | |
| External Obsol | |
| Cost Trend Factor | 1 |
| Condition | |
| % Complete | |
| Overall % Condition | 63 |
| RCNLD | 151,100 |
| Dep % Ovr | |
| Dep Ovr Comment | |
| Misc Imp Ovr | |
| Misc Imp Ovr Comment | |
| Cost to Cure Ovr | |
| Cost to Cure Ovr Comment | |

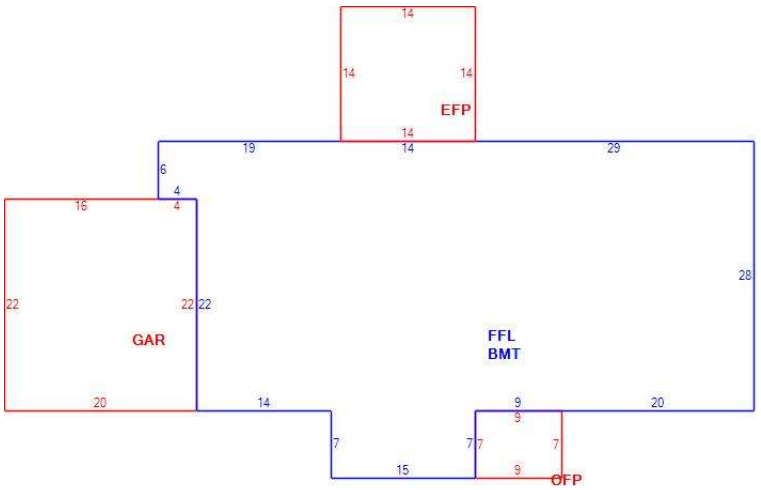

## OB - OUTBUILDING & YARD ITEMS(L) / XF - BUILDING EXTRA FEATURES(B)

| Code | Description | Su | Sub Type | Lan | Units | Unit Price | Yr Blt | % | Dep. | Cond | Gra | Qual | Apprais Va |
|---|---|---|---|---|---|---|---|---|---|---|---|---|---|
| 03 | GARAGE | OB | Outbuildi | L | 336 | 28.18 | 1969 | 50 | 0.00 | FR | A | 1.00 | 4,700 |
| 15 | SHOP | | | L | 784 | 32.78 | 1969 | 50 | 0.00 | FR | A | 1.00 | 12,800 |
| SOL | Solar Panels | EX | Extra Fea | B | 1 | 0.00 | 1981 | 63 | 1.00 | | | 0.00 | 0 |

## BUILDING SUB-AREA SUMMARY SECTION

| Subarea | Description | Living | Gross | Eff Area | Unit Cost | Undeprec Value |
|---|---|---|---|---|---|---|
| BMT | BASEMENT | 0 | 1,753 | | 20.47 | 35,892 |
| EFP | ENCL PORCH | 0 | 196 | | 30.78 | 6,033 |
| FFL | 1ST FLOOR | 1,753 | 1,753 | | 102.26 | 179,258 |
| GAR | GARAGE | 0 | 440 | | 40.90 | 17,997 |
| OFP | OPEN PORCH | 0 | 63 | | 9.74 | 614 |
| | Ttl Gross Liv / Lease Area | 1,753 | 4,205 | 2,345 | | 239,794 |