Property Location 105 BROOKHAVEN DR | Map ID 71/ 39/ 26/ / | Bldg Name | State Use 101
Vision ID 5184 | Account # 5261 | Bldg # 1 | Sec # 1 of 1 | Card # 1 of 1 | Print Date 11-04-2020 8:40:26 A

CURRENT OWNER	TOPO TYPE	UTILITY	STREET	LOCATION
PENNDORF JEFFREY D				
PENNDORF KIM D	TOPO WET	EASEMENT	TRAFFIC	CORNER
105 BROOKHAVEN DR	DRAINAGE		VIEW	COMMUNITY
EAST LONGMEADOW MA 01028				

GIS ID F_392063_2857048

SUPPLEMENTAL DATA

Alt Prcl ID	Received
SP Permit	NIA
Chapter Land	Field 8
OC Dates	Field 9
In+Ex FY	Field 10
Mailed	Assoc Pid#

CURRENT ASSESSMENT

Description	Code	Appraised	Assessed
RESIDNTL.	101	233700	233,700
RES LAND	101	111800	111,800
RESIDNTL.	101	20200	20,200
Total		365,700	365,700

1006

EAST LONGMEADOW

RECORD OF OWNERSHIP

	BK-VOL/PAGE		SALE DATE	Q/U	V/I	SALE PRICE	VC
PENNDORF JEFFREY D	09284	0116	10-20-1995	U	I	194,000	
KANE THOMAS J + GLORIA A	04522	0346	12-02-1977	U	I	0	

PREVIOUS ASSESSMENTS (HISTORY)

Year	Code	Assessed	Year	Code	Assessed	Year	Code	Assessed
2020	101	222,900	2019	101	216,900	2018	101	203,700
	101	111,800		101	108,300		101	108,300
	101	20,200		101	20,200		101	20,200
	Total	354900		Total	345400		Total	332200

EXEMPTIONS

Year	Code	Description	Amount
		Total	0.00

OTHER ASSESSMENTS

Code	Description	YEAR	Amount	Comm Int

This signature acknowledges a visit by a Data Collector or Assessor

ASSESSING NEIGHBORHOOD

Nbhd	Nbhd Name	B	Tracing	Batch
0001			101	MG

NOTES

APPRAISED VALUE SUMMARY

Appraised BLDG. Value (Card)	233,700
Appraised Xf (B) Value (Bldg)	0
Appraised Ob (B) Value (Bldg)	20,200
Appraised Land Value (Bldg)	111,800
Special Land Value	0
Total Appraised Parcel Value	365,700
Valuation Method	C
Adjustment	
Net Total Appraised Parcel Value	365,700

BUILDING PERMIT RECORD

Permit Id	Issue Date	Type	Description	Amount	Insp Date	% Comp	Date Comp	Comments
201803318	12-21-2018	91	INSULATION	4,186		0		
199	07-08-2011	9	ALTERATION	5,000				RESUPPORT GABL
109	05-11-2010	11	POOL	33,695				20` X 40` INGROUN
112	05-16-2003	8	RENOVATION	51,000				

VISIT / CHANGE HISTORY

Date	Type	Is	Id	Cd	Purpose/Result
07-03-2019			334	2	MEASURED
03-30-2012			317	15	PERMIT VISIT
01-21-2011			317	15	PERMIT VISIT
04-06-2007			250	P1	PHONE MESSAG
09-28-2006			311	2	MEASURED
02-09-2004			311	15	PERMIT VISIT
04-03-2000			247	14	INSPECTED

LAND LINE VALUATION SECTION

B	Use Co	Description	Zone	D	Fronta	Depth	Land Units		Unit Price	I. Fact	S.A.	Ac Di	C. Fact	St. Idx	Adj	Notes	Special Pricing				Size A	Adj Unit Pric	Land Value
1	101	ONE FAM	RA				35,732	SF	2.63	1.190	7	LAND	1.00	MG	1.00			0			1.000	3.13	111,800
Total Card Land Units							0.820	AC	Parcel Total Land Area:			0.8203										Total Land Value	111,800

Property Location 105 BROOKHAVEN DR | Map ID 71/ 39/ 26/ / | Bldg Name | State Use 101
Vision ID 5184 | Account # 5261 | Bldg # 1 | Sec # 1 of 1 | Card # 1 of 1 | Print Date 11-04-2020 8:40:26 A

CONSTRUCTION DETAIL

Element	Cd	Description
Style	18	SPLIT ENT
Model	01	RESIDENTIAL
Grade	C+	AVG. (+)
Stories	1.00	1 STORY
Foundation	1	CONCRETE
Exterior Wall 1	4	VINYL
Exterior Wall 2		
Roof Structure	1	GABLE
Roof Cover	1	ASPHALT SH
Interior Wall 1	1	DRYWALL
Interior Wall 2		
Interior Floor 1	4	CARPET
Interior Floor 2		
Heat Fuel	2	GAS
Heat Type	3	FORCED H/W
AC Type	03	FULL
Bedrooms	4	
Full Baths	3	
Half Baths	0	
Extra Fixtures	1	
Total Rooms	8	
Bath Style	A	AVERAGE
Half Bath Style		
Kitchens	1	
Kitchen Style	A	AVERAGE
Extra Kitchens	0	
Extra Kitchen St		
FBM Sqft	1472	
FBM Quality	3	
Fireplaces	2	
WS Flues		
Central Vac	1	YES
Frame	1	WOOD

CONSTRUCTION DETAIL (CONTINUED)

Element	Cd	Description
Basement Floor	12	CONCRETE
Bsmt Garage	3	
#Heat Sys	1.00	
Units	1	

MIXED USE

Code	Description	Percentage
101	ONE FAM	100
		0
		0

COST / MARKET VALUATION

Adj Base Rate	91.33
RCN	333,804
Net Other Adj	
Year Built	1968
Effective Year Built	1988
Depreciation Code	GD
Remodel Rating	
Year Remodeled	
Depreciation %	30
Functional Obsol	
External Obsol	
Cost Trend Factor	1
Condition	
% Complete	
Overall % Condition	70
RCNLD	233,700
Dep % Ovr	
Dep Ovr Comment	
Misc Imp Ovr	
Misc Imp Ovr Comment	
Cost to Cure Ovr	
Cost to Cure Ovr Comment	

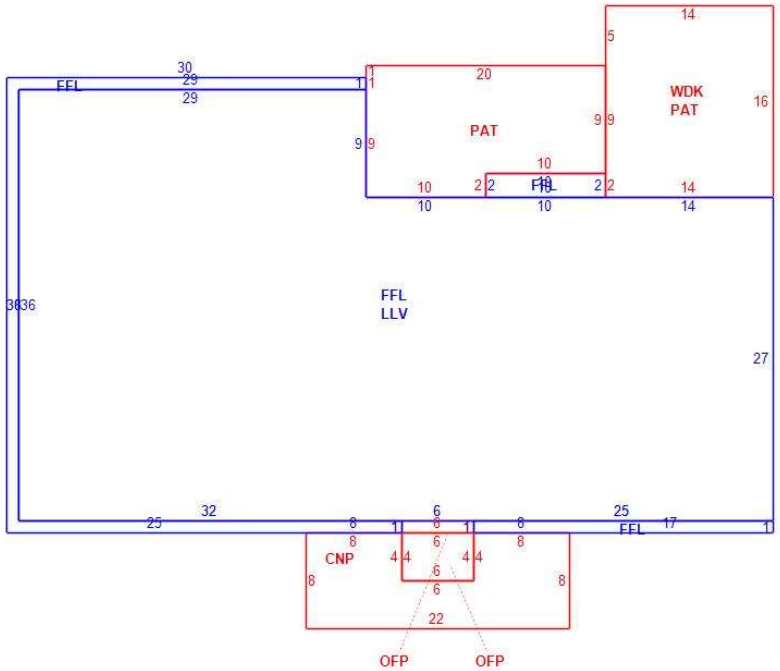

OB - OUTBUILDING & YARD ITEMS(L) / XF - BUILDING EXTRA FEATURES(B)

Code	Description	Su	Sub Type	Lan	Units	Unit Price	Yr Blt	%	Dep.	Cond	Gra	Qual	Apprais Va
11	POOL I-V	OB	Outbuildi	L	800	29.00	2010	70	0.00	GD	A	1.00	16,200
19	PATIO			L	432	5.75	1974	60	0.00	AV	A	1.00	1,500
02	SHED/FR			L	112	7.48	1995	70	0.00	GD	G	1.25	700
02	SHED/FR			L	280	7.48	2005	70	0.00	GD	G	1.25	1,800

BUILDING SUB-AREA SUMMARY SECTION

Subarea	Description	Living	Gross	Eff Area	Unit Cost	Undeprec Value
CNP	CANOPY	0	152		6.60	1,004
FFL	1ST FLOOR	2,106	2,106		125.49	264,282
LLV	LOWR LEVEL	0	1,962		31.40	61,616
OFP	OPEN PORCH	0	30		12.55	376
PAT	PATIO	0	424		6.22	2,635
WDK	WOOD DECK	0	224		17.37	3,890
	Ttl Gross Liv / Lease Area	2,106	4,898	2,660		333,804